TECHNICAL GUIDE FOR END CARRIAGES

TOP-RUNNING

English SUPDOC76BA05B-0.ORD 27.3.2015

- - - -

150976 19.3.2015

Original instructions

Table of contents

1 UPDATE HISTORY

Section	Changes	Date	Handled by
1, 4.2.1, 4.2.2, 6	New sections added: • 1 Update history • 4.2.2 Wheel wearing limits • 4.2.1 Wheel groove width • 6 Wheel loads (Fem Loading Cases I, II, III and Fatique)	18.2.2015	TUISKSA
3, 4.2, 4.3, 4.5, 4.6, 4.6.4, 4.6.8, 5.1, 5.2	Updated sections: • 3 Construction • 4.2 Rail wheels • 4.3 End carriage main girder connections • 4.5 Traveling machinery • 4.6 Additional features • 4.6.4 Jacking point • 4.6.8 Encoder assembly • 5.1 2-wheel end carriages • 5.2 4-wheel end carriages	18.2.2015	TUISKSA

2 GENERAL

- LH- end carriages are replacing the former SH end carriages. LH- code has been taken into use to differentiate LH- end carriages from SH end carriages.
- Rail wheel diameters are 250, 320, 400, 500, 630, 710 and 800 mm.
- The maximum wheel loads are calculated based on the steel structure, the permissible surface pressure of the rail wheel, the maximum bearing capacity and the service life of the bearing.

Table 1. FEM component groups and the corresponding number of cycles.

FEM	E3	E4	E5	E6	E7	E8
Number of cycles	63 000	125 000	250 000	500 000	1 000 000	2 000 000

Table 2. Maximum allowed dynamic vertical and horizontal wheel loads (FEM, Case I, dynamic factor = 1.15).

LH- end carriage	Diameter of the rail wheel [mm]	Vertical wheel load [kN]	Horizontal wheel load [kN]
LH-25	250	200	33
LH-32	320	250	41
LH-40	400	345	57
LH-50	500	550	91
LH-63	630	720	119
LH-71	710	900	149
LH-80	800	1050	173

The LH- end carriages and the pre-selected additional features are calculated with the allowed loadings and dimensions given in the document. If the loadings or dimensions differ from the allowed values, please contact the product specialist.

3 CONSTRUCTION

FEM1.001-1987 is used as a basic standard in the dimensioning of the LH- end carriages. The dimensioning is made according to loading cases I, II and III.

Table 3. Main parts of LH- end carriages.

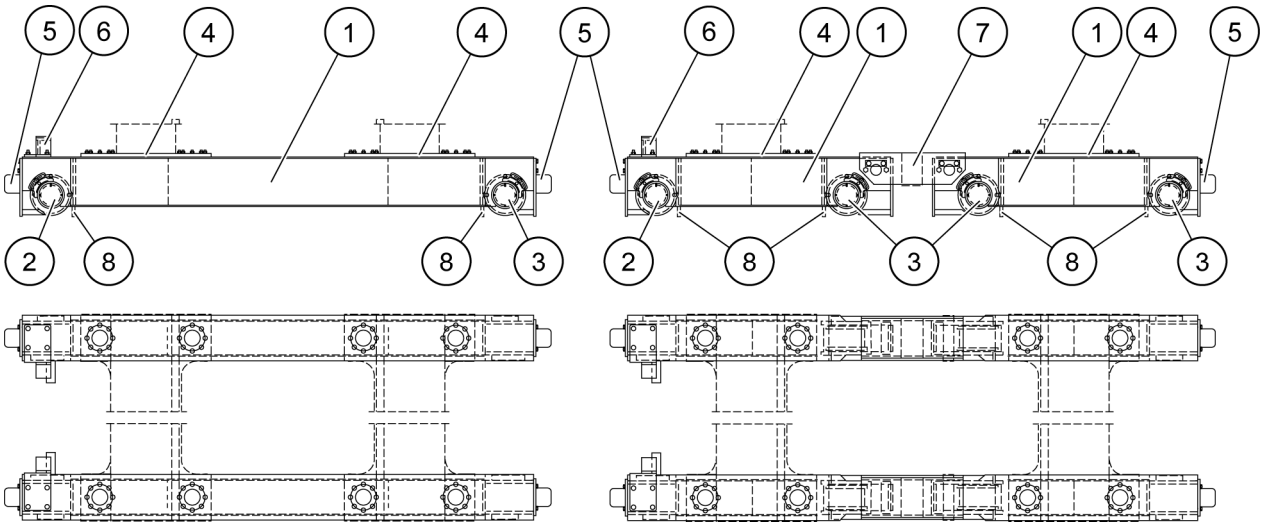

2-WHEEL END CARRIAGE 4-WHEEL END CARRIAGE

1. End carriage
2. Rail wheel (driven)
3. Rail wheel (idle)
4. Joint plate
5. Buffer
6. Torque arm
7. Jointed beam
8. Anti-derailment support

3.1 Steel structure

- The steel structure is designed to withstand the loadings of the rail wheel load.
- Construction is a welded box type.
- The material is S355J2G3/EN10025 (Fe52D yield strength = minimum 355 N/mm^2).
- The positions of the diaphragms are standardized for different wheelbases.
- Anti-derailment devices are as standard.

3.2 Rail wheels

- With or without flanges.
- The material is 42CrMo4V.
- Grooves are flame hardened to a hardness of 45-55 HRC (500 HB) and depth of 4-6 mm.
- The ultimate tensile strength is 800 N/mm^2 and the permissible surface pressure P_L = 7.2 N/mm^2.
- Re-aligning is possible with the eccentric bearing housings and the threaded bearing covers.
- The driving shafts are individual for each gear. These shafts must be stated in the order.

3.3 End carriage and main girder connections

3.3.1 Standard top connection

- Includes joint plates, shear rings, covers and bolts.
- The main girder is locked directly upon the end carriage with welded shear rings, covers and bolts.
- On delivery the shear rings are tack welded and the covers and the cover fixing bolts are preassembled.

3.3.2 Low connection

- Includes joint plates, shear rings, covers, bolts and round bars.
- The main girder is locked upon the end carriage with welded shear rings, covers and bolts, and to the end carriage side plate with round bars, covers and bolts.
- On delivery the shear rings are tack welded and the round bars, covers and the fixing bolts are preassembled.

3.3.3 Selecting the joint plate

DANGER	**FALLING CRANE HAZARD!** **LOOSE FIXING BOLTS COULD CAUSE DEATH OR SEVERE INJURY. FIXING BOLTS MUST BE CHECKED ANNUALLY.**

Calculate the maximum assumed driving force on one rail while the other end has jammed:

$$F_d = 0.15 \cdot \sum P_{stat\_\max\_d}$$

where:

F_d is the driving force [kN]

$\sum P_{stat\_\max\_d}$ is the sum of the maximum static wheel loads of the driven wheels on one rail [kN]

0.15 is the friction coefficient (steel/steel)

The moment of joint plate can be checked with the following formulas if calculation program, like EOTMan, is not available.

$$M = \frac{F_d \cdot L}{4}$$ (With double girder crane)

$$M = \frac{F_d \cdot L}{2}$$ (With single girder crane)

where:

M is the moment that the joint plate has to transfer [kNm]

F_d is the maximum assumed driving force on one rail [kN]

L is the span [m]

After calculations, please use tables 12 or 14 to select the joint plate based on the allowed moment according to Case III.

3.4 Buffers

- Fixed to both ends of the end carriage by bolt connection.
- Rubber-, polyurethane- and hydraulic buffers are available.
- Selected case by case.
- Buffer type shall be included in the LH- end carriage order.

3.5 Traveling machineries

- LH- end carriages are designed to use helical gears (QM, HSC etc.).
- The traveling machineries shall always be ordered separately.
- The standard location of the traveling machineries is shown in figure 1.
- The standard position of the gear is vertical.

Figure 1. Location of traveling machineries.

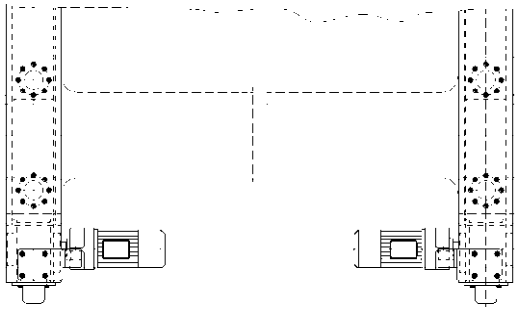

- The order of the end carriage includes the torque arm for the traveling machinery.
- The torque arm and fixing bolts are delivered preassembled.

3.6 Additional features

3.6.1 Guide rollers

- Guide rollers are fixed to the ends of the end carriages with bolt joint and spring pins.
- Re-alignment can be done by turning the eccentric shafts, when the rollers can be adjusted in the radial direction ±8 mm.
- Guide rollers can be used when the rail is fixed by welding or with rail clamps (e.g. RIW-rail clamps NO 17933), but the space between guide roller and clamp/welding seam must be checked case by case.
- When using guide rollers the rail wheels are without flange.
- Guide rollers shall be mentioned separately in the LH- end carriage order (additional features). They can only be located at one end of the crane.

Used rail width and location of guide roller must be mentioned.

3.6.2 Other additional features

- Buffer extension (see chapter 4.6.2)
- Rail brush and rail cleaner (see chapter 4.6.3)
- Jacking point (see chapter 4.6.4)
- Storm locking (see chapter 4.6.5)
- Earthquake support (see chapter 4.6.6)
- Mechanical locking between cranes (see chapter 4.6.7)
- Encoder assembly (see chapter 4.6.8)
- Lubrication tubes (see chapter 4.6.9)
- Fixing of DynATrak/R sensor (see chapter 4.6.10)

3.7 Surface treatment

LH- end carriages are normally delivered primary painted. The final painting shall be made according to painting instructions for crane (see example in table 4) at the same time as the crane is painted.

Table 4. Example of a painting instruction for crane.

EP180/3 – Sa 2½		Dry Film Thickness
1. Shot blasting	Sa 2½	
2. Prime coat	Epoxy primer	60 µm
3. Stripe coating	Epoxy primer	
4. Intermediate coat	Epoxy primer	60 µm
5. Finish coat	Epoxy top coat, semi gloss	60 µm
	Total nominal dry film thickness	180 µm
The painting shall fulfill the requirements of standard ISO-EN 12944: Average dry film thickness shall be at least the nominal value = 180 µm The lowest reading shall be at least 80 % of the nominal value = 144 µm **Notice:** Stripe coat shall be applied for all external edges and welding seams, after prime coat and prior to painting the first intermediate coat		

4 ORDERING THE LH- END CARRIAGE

Table 5. Ordering code of the LH- end carriage.

LH- **End carriage type**

40 **Diameter of the rail wheels [cm, i.e. 40 = 400 mm]**
25, 32, 40, 50, 63, 71, 80

B **Description**
– = Standard
B = Bogie

18 **Wheel base LL [dm, i.e. 18 = 1800 mm] (see figure 2)**
13, 16, 18, 20, 22, 25, 28, 31, 32, 36, 38, 40, 45, 50, 55, 63, 65, 80

N **Additional features**
N = Standard
E = Special (defined separately)

2400 **Rail gauge of main girder R [mm] (see figure 2)**

LH- 40 B 18 N 2400

LH- end carriages are ordered with the order form of LH- end carriages. All the information required in the order form shall be given.

Table 6. Example of ordering a standard LH- end carriage.

Ordering item	Ordering information	pcs
LH- end carriage	LH-40B18N2400	1
Steel structure	LH-40B18121200	1
Rail wheel	LHJ4-100-1-106-IW (idle)	6
	LHJ4-101-1-106-075 (driven)	2
Fastener for gear	LH-40-MTQ-07-18	1
End carriage and main girder connection	LH--BJ-03 E=1807.5; F=2055; B=945	4
Buffer	D160-240-G-PUR	4

4.1 Steel structure

Table 7. Ordering code of the steel structure. The ordering code orders the end carriages and jointed beams of both ends of the crane bridge, that is, 2 end carriages (2-wheel end carriage) or 4 end carriages and 2 jointed beams (4-wheel end carriage).

LH- **End carriage type**

40 **Diameter of the rail wheels [cm, i.e. 40 = 400 mm]**
25, 32, 40, 50, 63, 71, 80

B **Description**
– = 2-wheel end carriage
B = 4-wheel end carriage

18 **Wheel base LL [dm, i.e. 18 = 1800 mm] (see figure 2)**
13, 16, 18, 20, 22, 25, 28, 31, 32, 36, 38, 40, 45, 50, 55, 63, 65, 80

1 **Construction**
1 = Standard
2 = With guide rollers

2 **Buffer code (see table 18)**
0 = No buffer
1…8= Buffer from table 18
X = Special buffer (defined separately)

1200 **Bogie inner wheel distance S [mm] (see figure 2)**
Leave blank for 2-wheel end carriage

LH- 40 B 18 1 2 1200

Figure 2.Dimensions needed when ordering LH- end carriage.

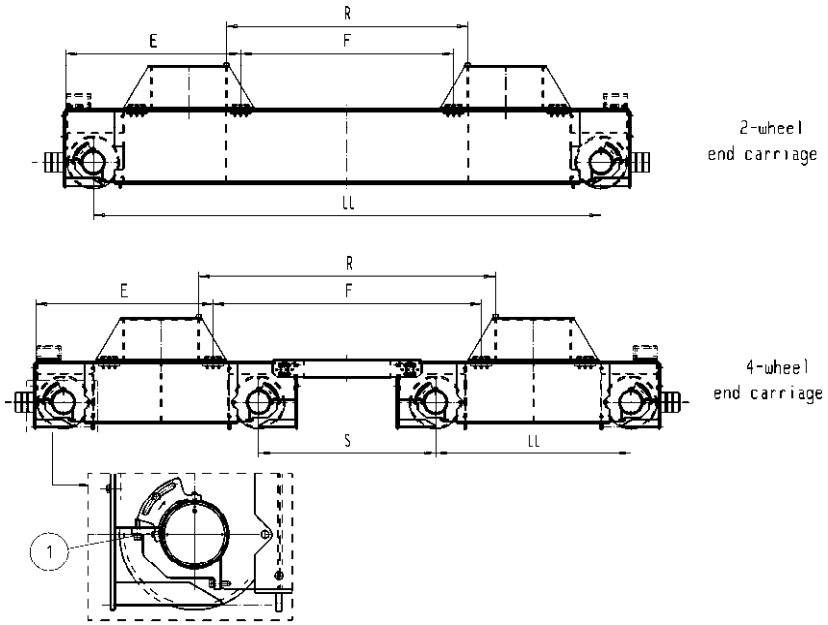

The wheel supports (position 1 in figure 2) don't exist in smaller end carriages LH-25, LH-32 and LH-40, but are standard in end carriages LH-63, LH-71 and LH-80. In LH-50 end carriages wheel supports are only used when traveling machinery code is 201 or bigger or when crane class is A7 or bigger. In an unclear case, please contact the product specialist.

4.2 Rail wheels

Table 8. Ordering code of the rail wheels.

LHJ4-101	**Rail wheel type (see table 9)**					
	-1	**Variant F (see table 9)** -0, -1, -2, -3 -0 = Wheel without flanges				
		-				
			105	**Wheel groove width [mm]** WF = Wheel without flanges		
				-		
					075	**Shaft code (see table 12)** IW = Idle wheel YYY = Special
						-L Handedness L = Left R = Right
						-EC EC = Encoder
LHJ4-101	**-1**	**-**	**105**	**-**	**075**	**-L**

Handedness of the wheel must be mentioned in the order.

Encoder must be mentionded in the order.

A specific machined bearing cover comes with the encoder.

Encoder can be ordered to the idle wheel.

Table 9. Technical data of the rail wheels.

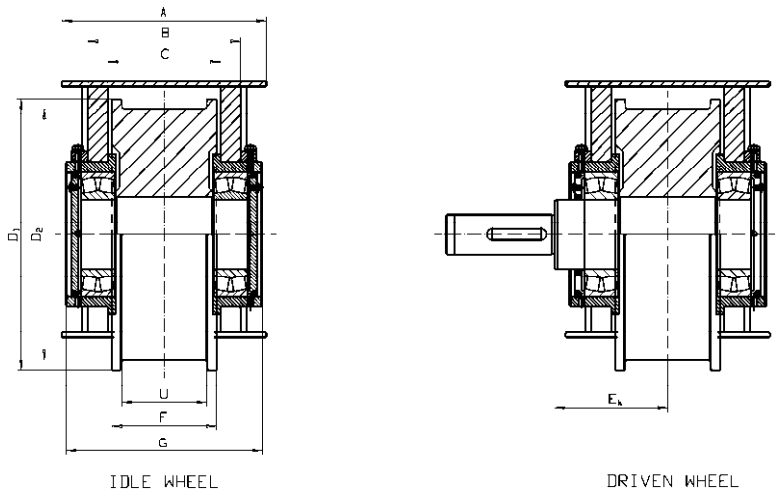

End carriage	Rail wheel	A [mm]	B [mm]	C [mm]	D1 [mm]	D2 [mm]	U_{max} [mm]			F [mm]				G [mm]	E_k [mm]	Bearing number	Idle	Driving
							-1	-2	-3	-0	-1	-2	-3					
LH-25	LHJ2.5-94	310	230	190	280	250	125	95	-	168	168	135	-	300	-	22218 C	x	
	LHJ2.5-95	310	230	190	280	250	125	95	-	168	168	135	-	300	185	22218 C		x
LH-32	LHJ3.2-60	310	230	180	355	320	125	95	-	165	165	135	-	299	-	22220 C	x	
	LHJ3.2-61	310	230	180	355	320	125	95	-	165	165	135	-	299	185	22220 C		x
LH-40	LHJ4-100	330	260	200	440	400	125	95	140	190	175	145	190	333	-	22222 CC/W33	x	
	LHJ4-101	330	260	200	440	400	125	95	140	190	175	145	190	333	200	22222 CC/W33		x
LH-50	LHJ5-93	380	306	226	540	500	150	100	-	200	200	150	-	394	-	22228 CC/W33	x	
	LHJ5-94	380	306	226	540	500	150	100	-	200	200	150	-	394	227	22228 CC/W33		x
LH-63	LHJ630-108	480	380	300	672	630	180	145	100	200	240	200	150	474	-	22230 CC/W33	x	
	LHJ630-109	480	380	300	672	630	180	145	100	200	240	200	150	474	300	22230 CC/W33		x
LH-71	LHJ71-03	590	490	400	754	710	180	145	-	200	240	200	-	590	-	23132 CC/W33	x	
	LHJ71-04	590	490	400	754	710	180	145	-	200	240	200	-	590	370	23132 CC/W33		x
LH-80	LHJ80-09	590	490	400	846	800	180	145	-	200	240	200	-	590	-	23134 CC/W33	x	
	LHJ80-10	590	490	400	846	800	180	145	-	200	240	200	-	590	370	23134 CC/W33		x

4.2.1 Wheel groove width

Table 10. Wheel groove width.

End carriage	Wheel groove width
LH-25	50,55,60,65,70,75,80,85,90,95,100,105,110,115,120,125
LH-32	50,55,60,65,70,75,80,85,90,95,100,105,110,115,120,125
LH-40	50,55,60,65,70,75,80,85,90,95,100,105,110,115,120,125,130,135,140
LH-50	50,55,60,65,70,75,80,85,90,95,100,105,110,115,120,125,130,135,140,145,150
LH-63	50,55,60,65,70,75,80,85,90,95,100,105,110,115,120,125,130,135,140,145,150,155,160,165,170,175,180
LH-70	65,70,75,80,85,90,95,100,105,110,115,120,125,130,135,140,145,150,155,160,165,170,175,180
LH-80	65,70,75,80,85,90,95,100,105,110,115,120,125,130,135,140,145,150,155,160,165,170,175,180

4.2.2 Wheel wearing limits

Small wearing is normal for rail wheels. If wearing affects the movement of crane or even one of the wearing limits (d1, b1, B*, Δ bf, t) has been increased, the wheel must be replaced. For criteria for wheel change, see the following tables.

Table 11. Wheel wearing limits, part 1.

Wearing limits of 2-flange wheels												
		VAR-1	**VAR-2**	**VAR-3**	**VAR-1**	**VAR-2**	**VAR-3**	**VAR-1**	**VAR-2**	**VAR-3**		
New wheel	Old wheel	New wheel	New wheel	New wheel	New wheel	New wheel	New wheel	New wheel	New wheel	New wheel	Old wheel	Old wheel
Wheel diameter	Min wheel diameter	Max groove	Max groove	Max groove	Min flange thickness (*)	Min flange thickness (*)	Min flange thickness (*)	Min flange thickness (**)	Min flange thickness (**)	Min flange thickness (**)	Max increase of groove	Min flange thickness (*)
d	d1	b	b	b	bf	bf	bf	bf_min	bf_min	bf_min	Δ_bf	b1
[mm]	[mm]	[mm]	[mm]	[mm]	[mm]	[mm]	[mm]	[mm]	[mm]	[mm]	[mm]	[mm]
250	247.5	125	95		21.5	20		18.4	15.8		6	12
320	317.5	125	95		20	20		19.6	16.9		6	12
400	396.5	125	95	140	25	25	25	20.7	18.1	22	6	12
500	496.5	150	100		25	25		24	19.8		6	15
630	626	180	145	100	30	27.5	25	27.8	25.1	21.3	6	16
710	705.5	180	145		30	27.5		28.6	25.9		6	20
800	795.5	180	145		30	27.5		29.5	26.8		6	21
(*) with max groove width, actual value for wheel (**) with max groove width, min. requirement acc. to EN 13135												

Table 11. Wheel wearing limits, part 2.

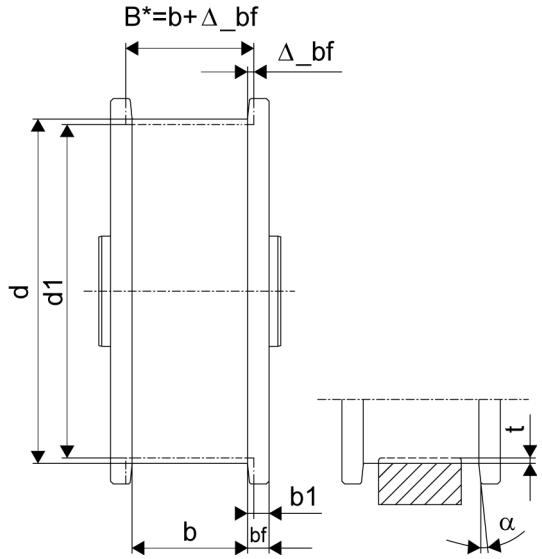

B* = max allowed groove (old wheel)

α = 6°

Corner angle (α) is first what wears out and can be indication that the alignment of wheel(s) or runway is not correct.

Additional criteria for wheel change	
	Inspection method
The groove (t) with a depth of ≥ 1.0 mm has been worn in the surface of the rail wheel, or there is a pit in the rolling surface.	Measurement with vernier callipers
The angle of the rail wheel flange (α) does not conform to the following values: 2-10°reference value 6°.	Measurement

Table 12. Gear shaft codes and dimensions.

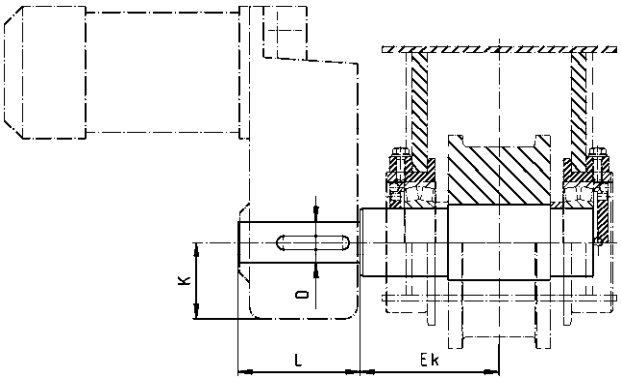

Shaft code	Shaft	Gear	LH-25	LH-32	LH-40	LH-50	LH-63	LH-71	LH-80	D 2) [mm]	L [mm]	K [mm]	Keyway
065	Keyway	QM06	x	x	x	x	x			55	180	115	16x6x160
075	Keyway	QM07	x	x	x	x	x			70	200	143	20x7.5x180
101	Keyway	QM10/GM10		x	x	x	x	x	x	90	250	190	25x9x230
102	Shrink disc	QM10/GM10		x	x	x	x	x	x	90	332	190	No
141	Keyway	HSCX140	x	x	x	x	x			70	205	150	20x7.5x185
142	Shrink disk	HSCX140	x	x	x	x	x			70	265	150	No
181	Keyway	HSCX180		x	x	x	x	x	x	90	230	190	25x9x210
182	Shrink disk	HSCX180		x	x	x	x	x	x	90	307	190	No
201	Keyway	HSCX200		x 1) 3)	x	x	x	x	x	100	260	205	28x10x240
202	Shrink disk	HSCX200			x	x	x	x	x	100	350	205	No
221	Keyway	HSCX225			x 1)	x	x	x	x	110	270	235	28x10x250
222	Shrink disk	HSCX225				x	x	x	x	110	370	235	No
251	Keyway	HSCX250				x	x	x	x	120	290	260	32x11x270
252	Shrink disk	HSCX250				x	x	x	x	120	420	260	No
281	Keyway	HSCX280				x 1) 4)	x	x	x	140	325	290	36x12x305
282	Shrink disk	HSCX280					x	x	x	140	450	290	No
Ek [mm]	-	-	185	185	200	227	300	370	370	-	-	-	-

1) Exceptionally small hollow shaft in the gear.
2) Tolerance of the shaft diameter is h6.
3) Keyway= 25x9x240, D2= 90.
4) Keyway= 32x11x305, D2= 130.

4.3 End carriage and main girder connections

It is recommended to use standard top connection with every LH- end carriage. However, low connection can be used with LH-25…LH-50.

4.3.1 Standard top connection (Shear ring + cover + bolt joint)

Table 13. Ordering code of end carriage and main girder connections (standard top connection).

LH-40-BJ	**Code of standard top connection**		
	03	**Type of joint plate (see table 14)**	
		E=, F=, D=	**Position of the joint shall be given in the order [mm] (see table 14)**

LH-40-BJ 03 E=, F=, D=

Table 14. Dimensions of standard top connection.

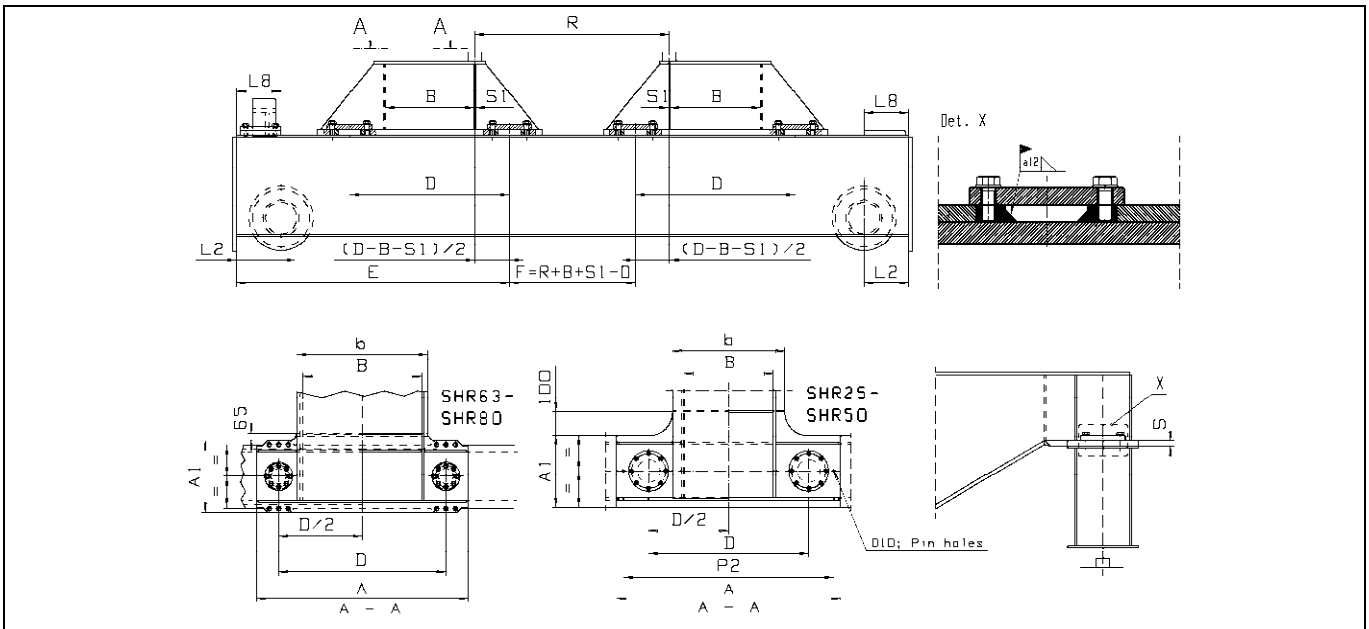

Joint plate	b [mm]	B_{max} [mm]	A [mm]	P2 [mm]	D [mm]	A1 [mm]	S [mm]	M_{max} [kNm] Case I	M_{max} [kNm] Case III	Weight [kg]	LH-end carriage
01	490	390	980	950	700	345	25	230	440	67	LH-25 (L2=L8=195) LH-32 (L2=L8=195) LH-40 (L2=235, L8=200) LH-50 (L2=285, L8=200)
02	745	645	1230	1180	950	345	25	315	600	90	
03	1045	945	1580	1560	1300	345	25	432	820	117	
04	490	390	1080	950	730	375	25	284	568	76	
05	745	645	1300	1180	950	375	25	381	763	99	
06	1045	945	1680	1560	1330	375	25	518	1036	130	
07	610	510	1100	1080	820	345	25	272	518	77	
08	610	510	1200	1180	850	375	25	331	638	87	
09	860	760	1350	1330	1070	345	25	355	676	102	
10	860	760	1450	1330	1100	375	25	428	872	110	
18	745	645	1300	-	950	556	25	381	763	137	LH-63 (L8=320)
19	1045	945	1680	-	1330	556	25	518	1036	183	
20	1330	1230	2000	-	1650	556	25	642	1285	222	
27	745	645	1570	-	1090	670	30	610	1220	228	LH-71 (L2=395, L8=320) LH-80 (L2=440, L8=320)
28	1045	945	1870	-	1390	670	30	735	1470	282	
29	1230	1130	2055	-	1575	670	30	885	1770	315	
30	1480	1380	2305	-	1825	670	30	1025	2050	360	

4.3.2 Low connection (Shear ring + cover + bolt joint + round bars)

Table 15. Ordering code of end carriage and main girder connections (low connection).

LH-40N **Code of low connection**

G03 **Type of joint plate (see table 16)**

C=, B=, R=, S1=, T4=, T5=

C = Distance between end carriage rail wheel and trolley rail [mm]
B = Inner distance between web plates [mm]
R = Rail gauge [mm]
S1 = Thickness of web plate [mm]
T4 = Thickness of top chord [mm]
T5 = Thickness of bottom chord [mm]

E=, E1=, F= **Calculated dimensions for location**

LH-40N G03 C=, B=, R=, S1=, T4=, T5= E=, E1=, F=

Table 16. Dimensions of low connection.

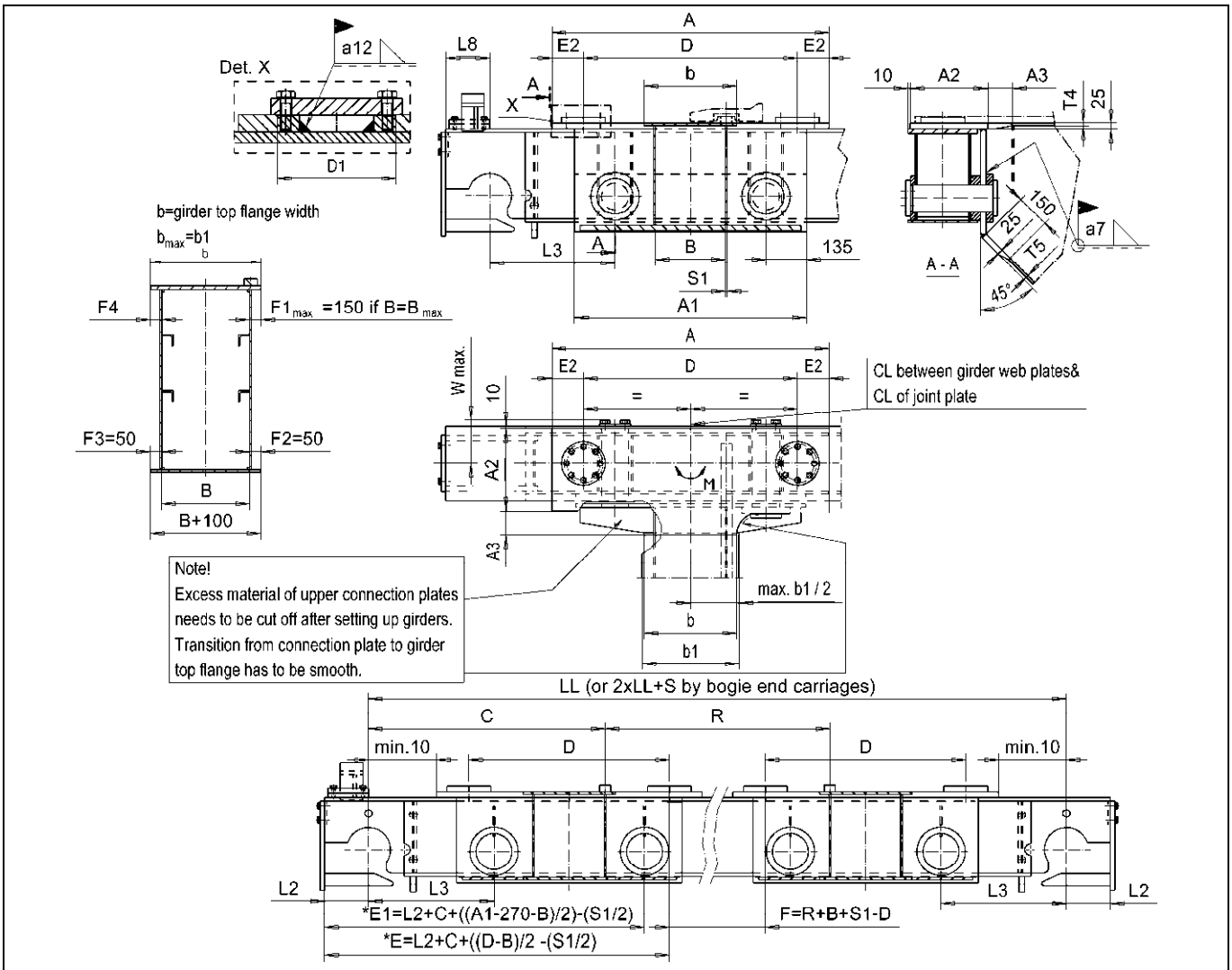

Joint plate	b1 [mm]	A [mm]	A1 [mm]	B_{max} [mm]	D [mm]	D1 [mm]	E2 [mm]	M_{max} [kNm]		LH-end carriage
								Case I	Case III	
G01	690	1020	1020	390	740	175	140	232	443	LH-32 LH-40 LH-50
G02	845	1230	1175	545	950	175	140	315	601	
G03	1145	1580	1475	845	1300	175	140	432	822	
G04	690	1080	1020	390	730	205	175	284	569	
G05	845	1300	1175	545	950	205	175	381	763	
G06	1145	1680	1475	845	1330	205	175	518	1036	

Table 17. Dimensions of low connection.

LH- end carriage	Joint	A2 [mm]	A3 [mm]	L8 [mm]	$L3_{min}$ [mm]	L2 [mm]	W_{max} [mm]
LH-25	SH25N	355	100	195	390	195	195
LH-32	SH32N	355	100	195	410	195	195
LH-40	SH40N	375	100	200	445	235	215
LH-50	SH50N	425	100	200	500	285	240

4.4 Buffers

The buffer code is needed for the ordering codes of steel structure, guide rollers and buffer extensions.

Table 18. Recommended buffer types.

Buffer code	Buffer type	LH-25	LH-32	LH-40	LH-50B13, -16	Rest of LH-50	LH-63-65	Rest of LH-63	LH-71	LH-80
0	No buffer	x	x	x	x	x	x	x	x	x
1	PUR D125	x 1) or 2)	x 1) or 2)	x 1) or 2)	x 1) or 2)	x 1) or 2)	x 1) or 2)	x 1) or 2)	x 1) or 2)	x 1) or 2)
2	PUR D160	x 2)	x 2)	x 1) or 2)	x 1) or 2)	x 1) or 2)	x 1) or 2)	x 1) or 2)	x 1) or 2)	x 1) or 2)
3	PUR D200	x 2)	x 2)	x 2)	x 1) or 2)	x 1) or 2)	x 1) or 2)	x 1) or 2)	x 1) or 2)	x 1) or 2)
4	PUR D250	-	-	x 2)	x 2)	x 1) or 2)	x 1) or 2)	x 1) or 2)	x 1) or 2)	x 1) or 2)
5	PUR D315	-	-	-	x 2)	x 2)	x 1) or 2)	x 2)	x 1) or 2)	x 1) or 2)
6	OLEO type 21 MBS	x 1)	x 1)	x 1)	x 1)	x 1)	x 1)	x 1)	x 1)	x 1)
7	OLEO type 4 MBZ	-	-	-	-	x 1)	x 1)	x 1)	x 1)	x 1)
8	OLEO type 9 MBZ	-	-	-	-	x 1)	x 1)	x 1)	x 1)	x 1)
X	Special buffer	x	x	x	x	x	x	x	x	x

1) Corner holes, 4 pcs
2) Center bolt, 1 pcs

See COM 12 for ordering code of the buffers.

4.5 Traveling machinery

Table 19. Fastener for QM06…QM10 gear.

LH-end carriage	Fastener for gear			Suitable for
	QM06	QM07	QM10	
LH-25	LH-25-MTQ-06-13	LH-25-MTQ-07-13	-	LH-25B13, -16
	LH-25-MTQ-06-18	LH-25-MTQ-07-18	-	LH-25-31, -38, LH-25B18, -20, -22
	LH-25-MTQ-06-45	LH-25-MTQ-07-45	-	LH-25-45
	LH-25-MTQ-06-55	LH-25-MTQ-07-55	-	LH-25-55
LH-32	LH-32-MTQ-06-13	LH-32-MTQ-07-13	LH-32-MTQ-10-13	LH-32B13, -16
	LH-32-MTQ-06-18	LH-32-MTQ-07-18	LH-32-MTQ-10-18	LH-32-31, -38, LH-32B18, -20, -22
	LH-32-MTQ-06-45	LH-32-MTQ-07-45	LH-32-MTQ-10-45	LH-32-45
	LH-32-MTQ-06-55	LH-32-MTQ-07-55	LH-32-MTQ-10-55	LH-32-55
LH-40	LH-40-MTQ-06-13	LH-40-MTQ-07-13	LH-40-MTQ-10-13	LH-40B13, -16
	LH-40-MTQ-06-18	LH-40-MTQ-07-18	LH-40-MTQ-10-18	LH-40-31, -38, LH-40B18, -20, -22
	LH-40-MTQ-06-45	LH-40-MTQ-07-45	LH-40-MTQ-10-45	LH-40-45
	LH-40-MTQ-06-55	LH-40-MTQ-07-55	LH-40-MTQ-10-55	LH-40-55
LH-50	LH-50-MTQ-06-13	LH-50-MTQ-07-13	LH-50-MTQ-10-13	LH-50B13, -16
	LH-50-MTQ-06-18	LH-50-MTQ-07-18	LH-50-MTQ-10-18	LH-50-31, -38, LH-50B18, -20, -22, -25
	LH-50-MTQ-06-45	LH-50-MTQ-07-45	LH-50-MTQ-10-45	LH-50-45
	LH-50-MTQ-06-55	LH-50-MTQ-07-55	LH-50-MTQ-10-55	LH-50-55
LH-63	LH-63-MTQ-06-22	LH-63-MTQ-07-22	LH-63-MTQ-10-22	LH-63B22, -25
	LH-63-MTQ-06-28	LH-63-MTQ-07-28	LH-63-MTQ-10-28	LH-63B28, -32, LH-63-45
	LH-63-MTQ-06-55	LH-63-MTQ-07-55	LH-63-MTQ-10-55	LH-63-55
	LH-63-MTQ-06-65	LH-63-MTQ-07-65	LH-63-MTQ-10-65	LH-63-65
LH-71	-	-	LH-71-MTQ-10-20	LH-71-50, LH-71B20, -25, -28, -32
	-	-	LH-71-MTQ-10-36	LH-71B36, -40
	-	-	LH-71-MTQ-10-63	LH-71-63
	-	-	LH-71-MTQ-10-80	LH-71-80
LH-80	-	-	LH-80-MTQ-10-20	LH-80B20, -25, -28, -32
	-	-	LH-80-MTQ-10-36	LH-80B36
	-	-	LH-80-MTQ-10-40	LH-80B40
	-	-	LH-80-MTQ-10-50	LH-80-50
	-	-	LH-80-MTQ-10-63	LH-80-63
	-	-	LH-80-MTQ-10-80	LH-80-80

Table 20. Fastener for HSCX140…200 gear.

LH-end carriage	Fastener for gear			Suitable for
	HSCX140	HSCX180	HSCX200	
LH-25	SH25-MT-14-13-R/L	-	-	LH-25B13, -16
	SH25-MT-14-18-R/L	-	-	LH-25-31, -38, LH-25B18, -20, -22
	SH25-MT-14-45-R/L	-	-	LH-25-45
	SH25-MT-14-55-R/L	-	-	LH-25-55
LH-32	SH32-MT-14-13-R/L	SH32-MT-18-13-R/L	SH32-MT-20-13-R/L	LH-32B13, -16
	SH32-MT-14-18-R/L	SH32-MT-18-18-R/L	SH32-MT-20-18-R/L	LH-32-31, -38, LH-32B18, -20, -22
	SH32-MT-14-45-R/L	SH32-MT-18-45-R/L	SH32-MT-20-45-R/L	LH-32-45
	SH32-MT-14-55-R/L	SH32-MT-18-55-R/L	SH32-MT-20-55-R/L	LH-32-55
LH-40	SH40-MT-14-13-R/L	SH40-MT-18-13-R/L	SH40-MT-20-13-R/L	LH-40B13, -16
	SH40-MT-14-18-R/L	SH40-MT-18-18-R/L	SH40-MT-20-18-R/L	LH-40-31, -38, LH-40B18, -20, -22
	SH40-MT-14-45-R/L	SH40-MT-18-45-R/L	SH40-MT-20-45-R/L	LH-40-45
	SH40-MT-14-55-R/L	SH40-MT-18-55-R/L	SH40-MT-20-55-R/L	LH-40-55
LH-50	SH50-MT-14-13-R/L	SH50-MT-18-13-R/L	SH50-MT-20-13-R/L	LH-50B13, -16
	SH50-MT-14-18-R/L	SH50-MT-18-18-R/L	SH50-MT-20-18-R/L	LH-50-31, -38, LH-50B18, -20, -22, -25
	SH50-MT-14-45-R/L	SH50-MT-18-45-R/L	SH50-MT-20-45-R/L	LH-50-45
	SH50-MT-14-55-R/L	SH50-MT-18-55-R/L	SH50-MT-20-55-R/L	LH-50-55
LH-63	SH63-MT-14-22-R/L	SH63-MT-18-22-R/L	SH63-MT-20-22-R/L	LH-63B22, -25
	SH63-MT-14-28-R/L	SH63-MT-18-28-R/L	SH63-MT-20-28-R/L	LH-63B28, -32, LH-63-45
	SH63-MT-14-55-R/L	SH63-MT-18-55-R/L	SH63-MT-20-55-R/L	LH-63-55
	SH63-MT-14-65-R/L	SH63-MT-18-65-R/L	SH63-MT-20-65-R/L	LH-63-65
LH-71	-	SH71-MT-18-20-R/L	SH71-MT-20-20-R/L	LH-71-50, LH-71B20, -25, -28, -32
	-	SH71-MT-18-36-R/L	SH71-MT-20-36-R/L	LH-71B36, -40
	-	SH71-MT-18-63-R/L	SH71-MT-20-63-R/L	LH-71-63
	-	SH71-MT-18-80-R/L	SH71-MT-20-80-R/L	LH-71-80
LH-80	-	SH80-MT-18-20-R/L	SH80-MT-20-20-R/L	LH-80B20, -25, -28, -32
	-	SH80-MT-18-36-R/L	SH80-MT-20-36-R/L	LH-80B36, LH-80-63
	-	SH80-MT-18-40-R/L	SH80-MT-20-40-R/L	LH-80B40
	-	SH80-MT-18-50-R/L	SH80-MT-20-50-R/L	LH-80-50
	-	SH80-MT-18-80-R/L	SH80-MT-20-80-R/L	LH-80-80

Table 21. Fastener for HSCX225…280 gear.

LH-end carriage	Fastener for gear			Suitable for
	HSCX225	HSCX250	HSCX280	
LH-40	SH40-MT-22-13-R/L	-	-	LH-40B13, -16
	SH40-MT-22-18-R/L	-	-	LH-40-31, -38, LH-40B18, -20, -22
	SH40-MT-22-45-R/L	-	-	LH-40-45
	SH40-MT-22-55-R/L	-	-	LH-40-55
LH-50	SH50-MT-22-13-R/L	SH50-MT-25-13-R/L	SH50-MT-28-13-R/L	LH-50B13, -16
	SH50-MT-22-18-R/L	SH50-MT-25-18-R/L	SH50-MT-28-18-R/L	LH-50-31, -38, LH-50B18, -20, -22, -25
	SH50-MT-22-45-R/L	SH50-MT-25-45-R/L	SH50-MT-28-45-R/L	LH-50-45
	SH50-MT-22-55-R/L	SH50-MT-25-55-R/L	SH50-MT-28-55-R/L	LH-50-55
LH-63	SH63-MT-22-22-R/L	SH63-MT-25-22-R/L	SH63-MT-28-22-R/L	LH-63B22, -25
	SH63-MT-22-28-R/L	SH63-MT-25-28-R/L	SH63-MT-28-28-R/L	LH-63B28, -32, LH-63-45
	SH63-MT-22-55-R/L	SH63-MT-25-55-R/L	SH63-MT-28-55-R/L	LH-63-55
	SH63-MT-22-65-R/L	SH63-MT-25-65-R/L	SH63-MT-28-65-R/L	LH-63-65
LH-71	SH71-MT-22-20-R/L	SH71-MT-25-20-R/L	SH71-MT-28-20-R/L	LH-71-50, LH-71B20, -25, -28, -32
	SH71-MT-22-36-R/L	SH71-MT-25-36-R/L	SH71-MT-28-36-R/L	LH-71B36, -40
	SH71-MT-22-63-R/L	SH71-MT-25-63-R/L	SH71-MT-28-63-R/L	LH-71-63
	SH71-MT-22-80-R/L	SH71-MT-25-80-R/L	SH71-MT-28-80-R/L	LH-71-80
LH-80	SH80-MT-22-20-R/L	SH80-MT-25-20-R/L	SH80-MT-28-20-R/L	LH-80B20, -25, -28, -32
	SH80-MT-22-36-R/L	SH80-MT-25-36-R/L	SH80-MT-28-36-R/L	LH-80B36, LH-80-63
	SH80-MT-22-40-R/L	SH80-MT-25-40-R/L	SH80-MT-28-40-R/L	LH-80B40
	SH80-MT-22-50-R/L	SH80-MT-25-50-R/L	SH80-MT-28-50-R/L	LH-80-50
	SH80-MT-22-80-R/L	SH80-MT-25-80-R/L	SH80-MT-28-80-R/L	LH-80-80

4.6 Additional features

Additional features can be ordered with LH- end carriages. When ordering, the code of additional features has to be E (N when standard) and the additional information needed has to be given. All the additional features shall be mentioned separately in the LH- end carriage order.

Table 22. Example of ordering LH- end carriage with additional features.

Ordering item	Ordering information	pcs
LH- end carriage	LH-40B18E2400	1
Steel structure	LH-40B18121200	1
Rail wheel	LHJ4-100-1-WF-IW (idle)	6
	LHJ4-101-1-WF-075 (driven)	2
Fastener for gear	LH-40-MTQ-07-18	1
End carriage and main girder connection	LH--BJ-03 E=1807.5; F=2055; B=945	4
Buffer	D160-240-G-PUR	4
Guide rollers	LH-40GR38100R2	2
Buffer extension	LH-BE2 L=325	2

4.6.1 Guide rollers

Table 23. Ordering code of guide rollers.

LH-	**End carriage type**						
	40	**Diameter of the rail wheels [cm, i.e. 40 = 400 mm]** 25, 32, 40, 50, 63, 71, 80					
		GR	**Code of guide roller**				
			38	**Guide roller type (see table 24)**			
				75	**Rail width b [mm] (see table 24)**		
					R	**Location of guide roller (see table 24)** L, R	
						3	**Buffer code (see table 18)** 0 = No buffer 1…8= Buffer from table 18 X = Special buffer (defined separately)
LH-	**40**	**GR**	**38**	**75**	**R**	**3**	

Table 24. Dimensions and weights of guide rollers.

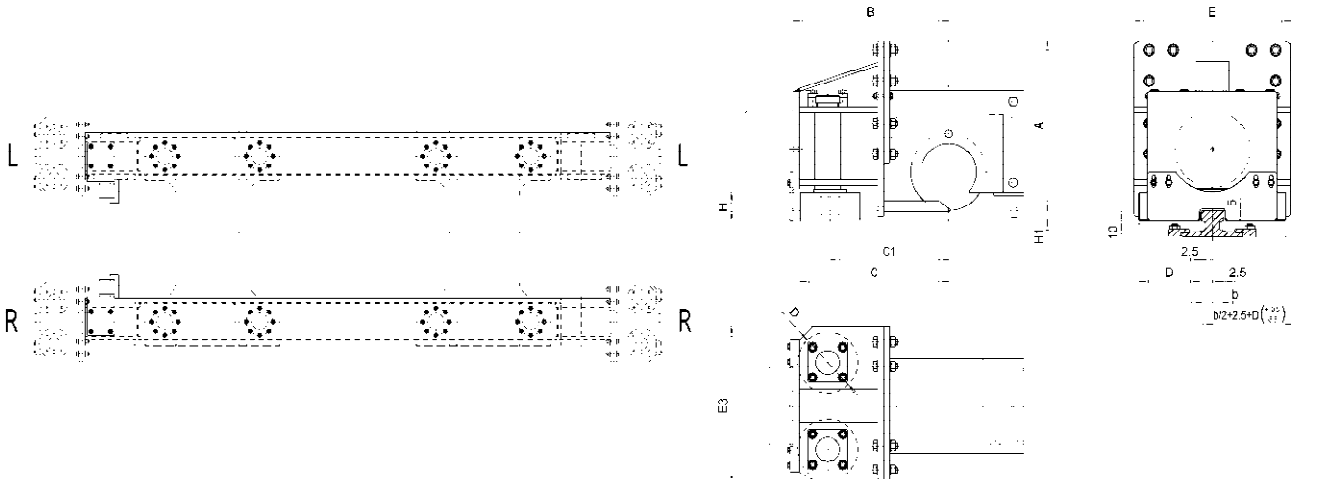

Guide roller	A [mm]	B [mm]	C [mm]	C1 [mm]	D [mm]	H [mm]	Weight [kg]	LH- end carriage	b [mm]	E [mm]	$E3_{max}$ [mm]	H1 [mm]
LH-25GR38	592	516	493	393	200	90	255	LH-25-31, -38, LH-25B18, -20, -22	65 75 100 120	520 520 520 520	491 501 526 546	24 34 44 54
LH-25GR45	620	516	493	393	200	90	258	LH-25-45				
LH-25GR55	647	516	493	393	200	90	266	LH-25-55				
LH-25GR16	554	516	493	393	200	90	247	LH-25B13, -16				
LH-32GR38	617	516	493	393	200	90	259	LH-32-31, -38, LH-32B18, -20, -22				
LH-32GR45	647	516	493	393	200	90	265	LH-32-45				
LH-32GR55	736	516	493	393	200	90	282	LH-32-55				
LH-32GR16	584	516	493	393	200	90	254	LH-32B13, -16				
LH-40GR38	699	561	558	433	250	110	317	LH-40-31, -38, LH-40B18, -20, -22	65 75 100 120	580 580 580 580	591 601 626 646	24 34 44 54
LH-40GR45	749	561	558	433	250	110	325	LH-40-45				
LH-40GR55	915	561	558	433	250	110	377	LH-40-55				
LH-40GR16	665	561	558	433	250	110	312	LH-40B13, -16				
LH-50GR38	817	675	737	537	400	111	592	LH-50-31, -38, LH-50B18, -20, -22, -25	65 75 100 120	750 750 750 750	891 901 926 946	24 34 44 54
LH-50GR45	887	675	737	537	400	111	606	LH-50-45				
LH-50GR55	947	675	737	537	400	111	620	LH-50-55				
LH-50GR16	737	675	737	537	400	111	570	LH-50B13, -16				
LH-63GR55	990	745	807	607	400	111	614	LH-63-45, -55, LH-63B22, -25. –28, -32	65 75 100 120	750 750 750 750	891 901 926 946	24 34 44 54
LH-63GR65	1150	745	807	607	400	111	651	LH-63-65				
LH-71GR20	1160	915	977	727	500	116	1134	LH-71B20, -25, -28, -32	75 100 120	900 900 900	1101 1126 1146	34 44 54
LH-71GR36	1265	915	977	727	500	116	1174	LH-71B36, -40				
LH-71GR50	1160	915	977	727	500	116	1168	SH71-50				
LH-71GR63	1210	915	977	727	500	116	1188	LH-71-63				
LH-71GR80	1365	915	977	727	500	116	1217	LH-71-80				
LH-80GR20	1265	950	1012	762	500	116	1171	LH-80B20, -25, -28, -32	75 100 120	900 900 900	1101 1126 1146	34 44 54
LH-80GR36	1330	950	1012	762	500	116	1196	LH-80B36				
LH-80GR40	1400	950	1012	762	500	116	1225	LH-80B40				
LH-80GR50	1225	950	1012	762	500	116	1156	LH-80-50				
LH-80GR63	1325	950	1012	762	500	116	1194	LH-80-63				
LH-80GR80	1480	950	1012	762	500	116	1253	LH-80-80				

4.6.2 Buffer extension

Table 25. Ordering code of buffer extension.

LH-	**End carriage type**		
	BE	**Buffer extension**	
		1	**Buffer code (see table 18)** 0 = No buffer 1…8= Buffer from table 18 X = Special buffer (defined separately)
			L=200 **Length of the buffer extension [mm] (see table 26)**
LH-	**BE**	**1**	**L=200**

Table 26. Buffer extension (see drawing LH--BE for more information).

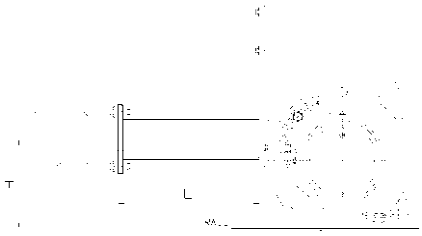

End carriage	$H_{default}$ [mm]
LH-25	200
LH-32	200
LH-40	225
LH-50	300
LH-63	315
LH-71	450
LH-80	460

4.6.3 Rail brush or rail cleaner

Table 27. Ordering code of rail brush.

LH-	**End carriage type**		
	RB	**Rail brush**	
		1	**Brush material** 1 = Steel (S355J2G3) 2 = Brass
LH-	**RB**	**1**	

Figure 3. Rail brush (see drawing LH--RB for more information).

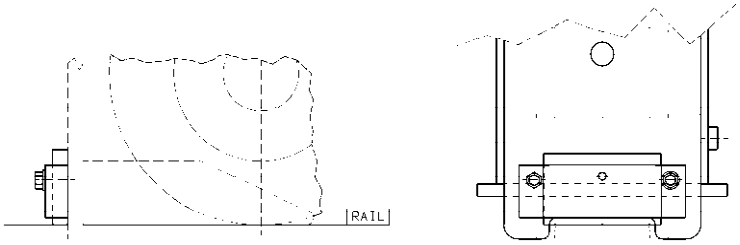

Table 28. Ordering code of rail cleaner.

LH-	**End carriage type**		
	-RC	**Rail cleaner**	
		-1	**Variant** -1 = 100x100 -2 = 130x130
LH-	**-RC**	**-1**	

Figure 4. Rail cleaner (see drawing LH--RC for more information).

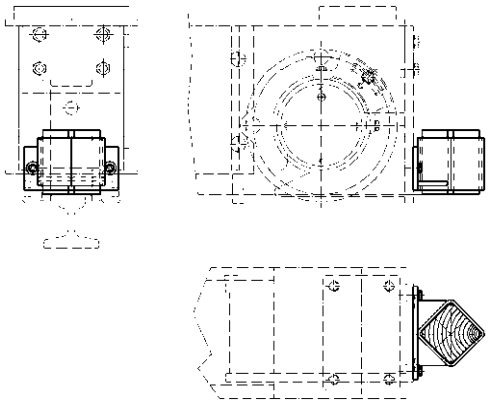

Use buffer extension if rail cleaner is used. Check the height of buffer so that the rail cleaner has enough space.

4.6.4 Jacking point

Table 29. Jacking points.

Jacking point	LH- end carriage
LH-25JP	LH-25
LH-50JP	LH-32, LH-40, LH-50
LH-80JP	LH-63, LH-71, LH-80

Figure 5. Jacking point (see drawings LH-50JP and LH-80JP for more information).

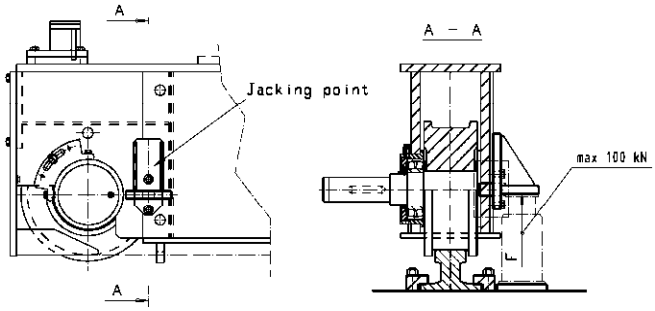

Required quantities:

- 2 pcs for 2-wheel end carriages
- 4 pcs for 4-wheel end carriages

4.6.5 Storm locking

Table 30. Ordering code of storm locking.

LH-	**End carriage type**			
	40	**Diameter of the rail wheels [cm, i.e. 40 = 400 mm]** 25, 32, 40, 50, 63, 71, 80		
		SL	**Code of storm locking**	
			2	**Location of storm locking** 1 = Inside 2 = Outside
				L=600 **Position of storm locking [mm] (see table 32)**
LH-	**40**	**SL**	**2**	**L=600**

Table 31. Storm locking (see drawings LH-xxSL for more information).

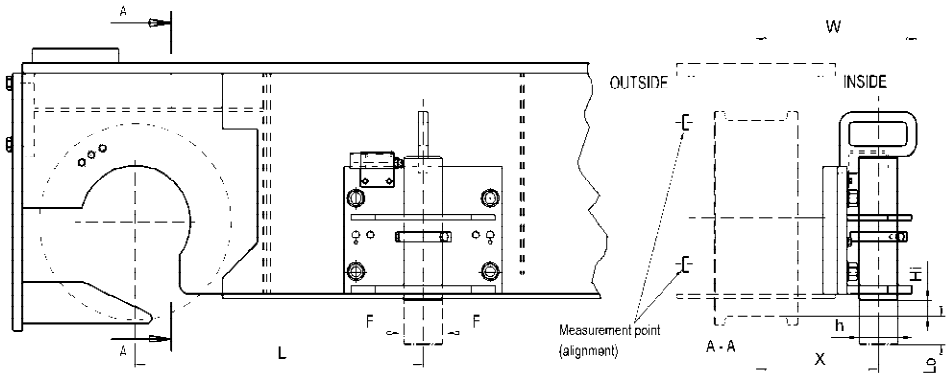

Storm locking	F_{max} [kN]	h [mm]	L_{min} [mm]	X_{max} [mm]	W_{max} [mm]	Hi [mm]	Lo [mm]
LH-25SL	120	80	400	238	317	41	49
LH-32SL	190	80	440	238	317	41	49
LH-40SL	190	80	450	257	336	41	49
LH-50SL	300	120	530	300	385	40	50
LH-63SL	300	120	600	350	435	55	35
LH-71SL	300	120	630	405	490	65	25
LH-80SL	300	120	670	405	490	65	25

4.6.6 Earthquake support

Table 32. Ordering code of earthquake support.

LH-	**End carriage type**			
	40	**Diameter of the rail wheels [cm, i.e. 40 = 400 mm]** 25, 32, 40, 50, 63, 71, 80		
		ES	**Code of earthquake support**	
			L=220	**Dimension L [mm] (see figure 6)**
				H=620 **Dimension H [mm] (see figure 6)**
LH-	**40**	**ES**	**L=220**	**H=620**

Figure 6. Earthquake support (see drawings LH-xxES for more information).

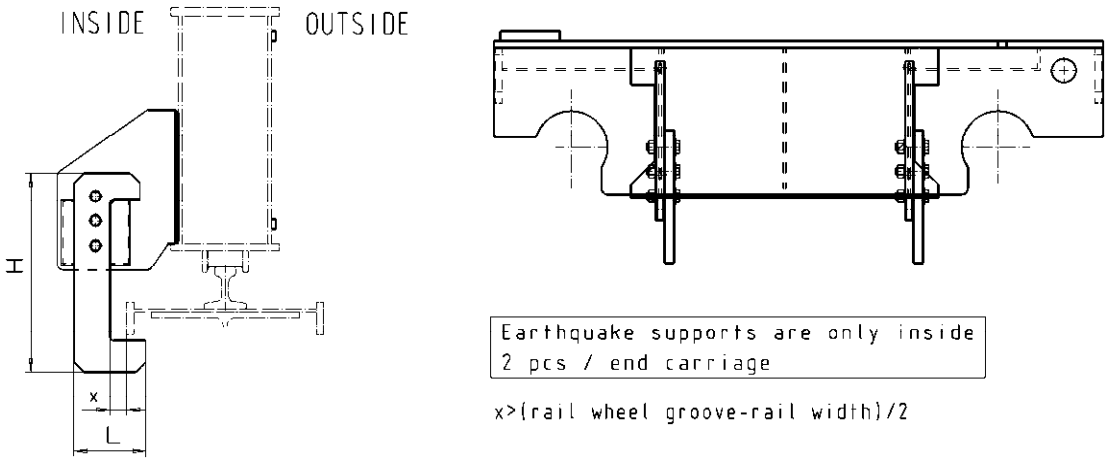

4.6.7 Mechanical locking between cranes

Table 33. Ordering code of mechanical locking between cranes.

LH-	**End carriage type**		
	ML	**Mechanical locking**	
		-1	**Variation** -1 =with buffer extension -2 = without buffer extension (only for LH-25-50)
			L=660 — **Length [mm] (see figure 7)**

LH- ML -1 L=660

Figure 7. Mechanical locking between cranes (see drawing LH-ML- for more information).

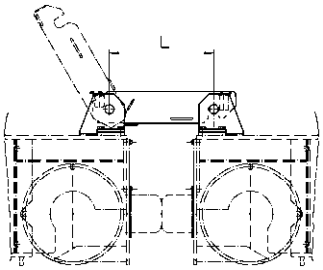

4.6.8 Encoder assembly

Table 34. Ordering code of encoder assembly.

LH-	**End carriage type**		
	-E	**Encoder assembly**	
		-1	**Variation** -1 = Incremental encoder DGS60-G1K01500 -2 = Absolute encoder TR CEV65M 01460 -3 = Encoder case by case, 6 mm shaft -4 = Encoder case by case, 10 mm shaft

LH- -E -1

Encoders used with DynATrak and positioning: Use variation –1 with DynATrak and variation –2 with positioning. If the encoder needs a cover, it is designed case by case.

Encoder must be mentioned in the rail wheel order.

Encoder can be ordered to the idle wheel.

Figure 8. Encoder assembly (see drawing LH--E- for more information).

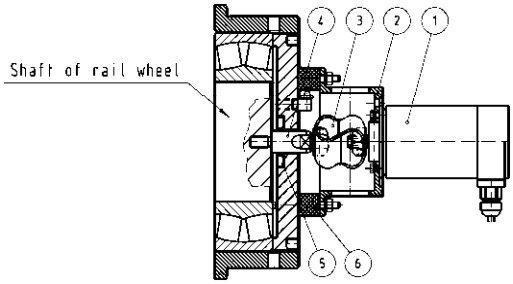

1. Encoder
2. Flange
3. Flexible coupling
4. Axle
5. Radial seal
6. Flexible fastener

4.6.9 Lubrication tubes

Table 35. Ordering code of lubrication tubes.

LH--LU — **Lubrication tubes of LH- end carriages**

- **2** — **Construction of end carriage**
  - 2 = 2-wheel end carriage
  - 4 = 4-wheel end carriage
- **1** — **Traveling machinery**
  - 1 = one traveling machinery / end carriage
  - 2 = two traveling machineries / end carriage
- **P** — **Material of tubes**
  - P = Plastic
  - S = Steel
- **1** — **Guide rollers**
  - 1 = No
  - 2 = Yes
- **38** — **Wheel base**

LH--LU 2 1 P 1 - 38

See drawings LH--LUxxxx for more information.

4.6.10 Fixing of DynATrak/R sensor

Table 36. Ordering code of fixing of DynATrak/R sensor.

LH- — **End carriage type**

- **40** — **Diameter of the rail wheels [cm, i.e. 40 = 400 mm]**
  - 25, 32, 40, 50, 63, 71, 80
- **DT** — **Code of fixing of DynATrak/R sensor**
- **2** — **Sensor type**
  - 1 = Laser (SENSICK OD100-35P840)
  - 2 = Ultrasonic (Microsonic lpc-25/CI/M18)

LH- 40 DT - 2

See drawings LH-xxDT-y for more information.

5 DIMENSIONS AND TECHNICAL VALUES OF LH- END CARRIAGES

5.1 2-wheel end carriages

Table 37. Dimensions of 2-wheel end carriages.

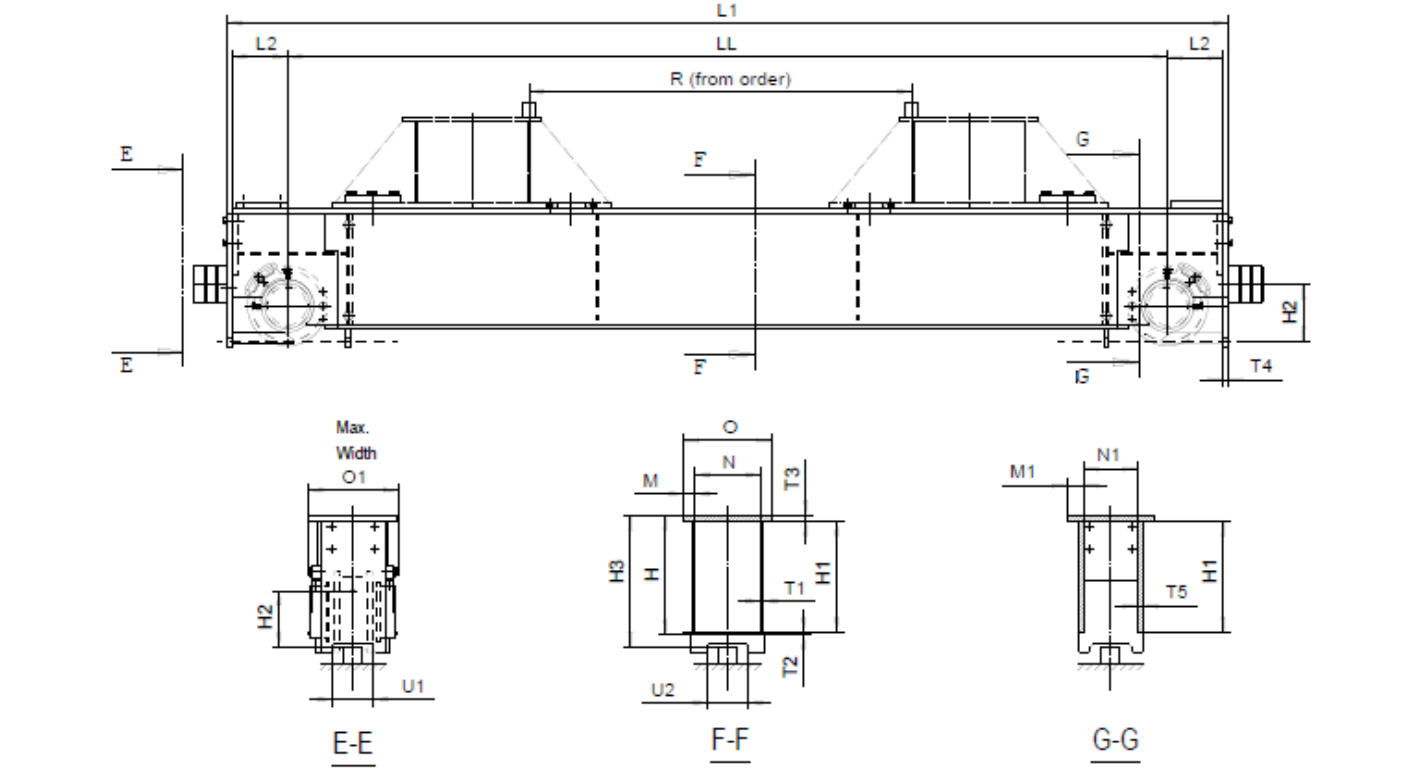

LH-end carriage	U1 [mm]	U2 [mm]	LL [mm]	L1 [mm]	L2 [mm]	H [mm]	H1 [mm]	H2 [mm]	H3 [mm]	M [mm]	M1 [mm]	N [mm]	N1 [mm]	O [mm]	O1 [mm]	T1 [mm]	T2 [mm]	T3 [mm]	T4 [mm]	T5 [mm]
LH-25-31	145	140	3100	3522	195	420	390	200	465	40	60	230	190	310	~332	8	10	20	16	20
LH-25-38	145	140	3800	4222	195	420	390	200	465	40	60	230	190	310	~332	8	10	20	16	20
LH-25-45	145	140	4500	4922	195	450	413	200	493	40	60	230	190	310	~332	8	12	25	16	20
LH-25-55	145	140	5500	5922	195	481	440	200	520	40	60	230	190	310	~332	8	16	25	16	20
LH-32-31	145	140	3100	3530	195	451	410	200	490	40	65	230	180	310	~332	8	16	25	20	25
LH-32-38	145	140	3800	4230	195	451	410	200	490	40	65	230	180	310	~332	8	16	25	20	25
LH-32-45	145	140	4500	4930	195	481	440	200	520	40	65	230	180	310	~332	8	16	25	20	25
LH-32-55	145	140	5500	5930	195	570	529	200	609	40	65	230	180	310	~332	8	16	25	20	25
LH-40-31	160	155	3100	3610	235	520	479	225	559	35	65	260	200	330	~354	10	16	25	20	30
LH-40-38	160	155	3800	4310	235	520	479	225	559	35	65	260	200	330	~354	10	16	25	20	30
LH-40-45	160	155	4500	5010	235	570	529	225	609	35	65	260	200	330	~354	10	16	25	20	30
LH-40-55	160	155	5500	6010	235	740	695	225	775	35	65	260	200	330	~354	12	20	25	20	30
LH-50-31	170	165	3100	3710	285	680	639	300	719	37	77	306	226	380	~415	12	16	25	20	40
LH-50-38	170	165	3800	4410	285	680	639	300	719	37	77	306	226	380	~415	12	16	25	20	40
LH-50-45	170	165	4500	5110	285	740	695	300	775	37	77	306	226	380	~415	12	20	25	20	40
LH-50-55	170	165	5500	6110	285	800	755	300	835	37	77	306	226	380	~415	12	20	25	20	40
LH-63-45	200	195	4500	5250	355	795	750	315	845	50	90	380	300	556	~556	20	20	25	20	40
LH-63-55	200	195	5500	6250	355	810	750	315	850	50	90	380	300	556	~556	25	30	30	20	40
LH-63-65	200	195	6500	7250	355	960	900	315	1000	50	90	380	300	556	~556	25	30	30	20	40
LH-71-50	200	195	5000	5830	395	950	900	450	1010	50	95	490	400	670	~670	16	20	30	20	45
LH-71-63	200	195	6300	7130	395	1000	950	450	1060	50	95	490	400	670	~670	20	20	30	20	45
LH-71-80	200	195	8000	8830	395	1145	1080	450	1195	50	95	490	400	670	~670	20	30	35	20	45
LH-80-50	200	195	5000	5920	440	1000	950	460	1060	50	95	490	400	670	~670	16	20	30	20	45
LH-80-63	200	195	6300	8220	440	1105	1050	460	1160	50	95	490	400	670	~670	20	25	30	20	45
LH-80-80	200	195	8000	8920	440	1265	1200	460	1315	50	95	490	400	670	~670	25	30	35	20	45

Table 38. Weights of 2-wheel end carriages. The weights are given for one end carriage.

LH-end carriage	Wheels+Steel structure [kg]			Steel structure [kg]	Wheels [kg]		
	-1	-2	-3		-1	-2	-3
LH-25-31	803	789	-	589	214	200	-
LH-25-38	888	874	-	674	214	200	-
LH-25-45	1047	1033	-	833	214	200	-
LH-25-55	1276	1262	-	1062	214	200	-
LH-32-31	1014	984	-	684	330	300	-
LH-32-38	1120	1090	-	790	330	300	-
LH-32-45	1265	1235	-	935	330	300	-
LH-32-55	1525	1495	-	1195	330	300	-
LH-40-31	1483	1435	1496	975	508	460	521
LH-40-38	1590	1542	1603	1082	508	460	521
LH-40-45	1821	1773	1834	1313	508	460	521
LH-40-55	2285	2237	2298	1777	508	460	521
LH-50-31	2208	2091	-	1305	903	786	-
LH-50-38	2378	2261	-	1475	903	786	-
LH-50-45	2691	2574	-	1788	903	786	-
LH-50-55	3085	2968	-	2182	903	786	-
LH-63-45	4304	4141	3911	2629	1675	1512	1282
LH-63-55	5312	5149	4919	3637	1675	1512	1282
LH-63-65	6374	6211	5981	4699	1675	1512	1282
LH-71-50	5653	5425	-	3607	2046	1818	-
LH-71-63	6771	6543	-	4725	2046	1818	-
LH-71-80	8258	8030	-	6212	2046	1818	-
LH-80-50	6331	6035	-	3801	2530	2234	-
LH-80-63	7759	7463	-	5229	2530	2234	-
LH-80-80	10465	10169	-	7935	2530	2234	-

5.2 4-wheel end carriages

Table 39. Dimensions of 4-wheel end carriages.

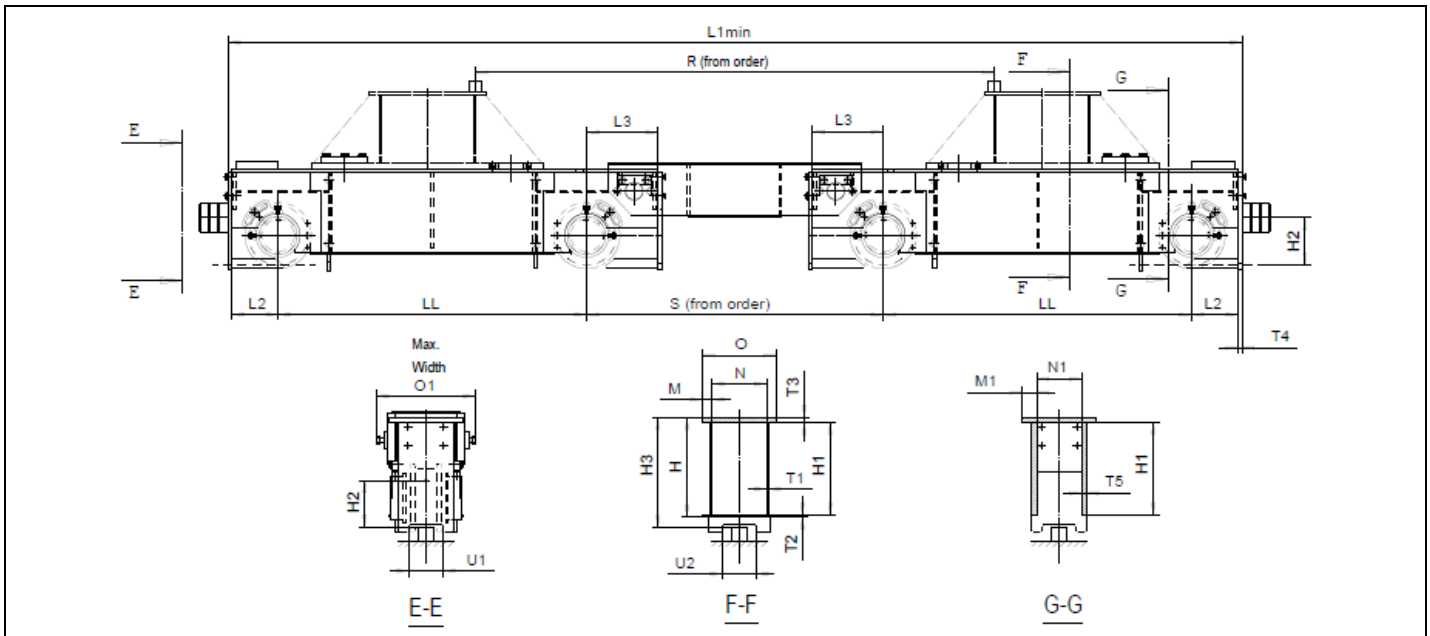

LH-end carriage	S_{min} [mm]	U1 [mm]	U2 [mm]	LL [mm]	$L1_{min}$ [mm]	L2 [mm]	L3 [mm]	H [mm]	H1 [mm]	H2 [mm]	H3 [mm]	M [mm]	M1 [mm]	N [mm]	N1 [mm]	O [mm]	O1 [mm]	T1 [mm]	T2 [mm]	T3 [mm]	T4 [mm]	T5 [mm]
LH-25B13	900	145	140	1300	3922	195	300	360	336	200	407	40	60	230	190	310	~415	8	8	16	16	20
LH-25B16	900	145	140	1600	4522	195	300	360	336	200	407	40	60	230	190	310	~415	8	8	16	16	20
LH-25B18	900	145	140	1800	4922	195	300	420	390	200	465	40	60	230	190	310	~415	8	10	20	16	20
LH-25B20	900	145	140	2000	5322	195	300	420	390	200	465	40	60	230	190	310	~415	8	10	20	16	20
LH-25B22	900	145	140	2200	5722	195	300	420	390	200	465	40	60	230	190	310	~415	8	10	20	16	20
LH-32B13	1000	145	140	1300	4030	195	310	410	382	200	457	40	65	230	180	310	~415	8	8	20	20	25
LH-32B16	1000	145	140	1600	4630	195	310	410	382	200	457	40	65	230	180	310	~415	8	8	20	20	25
LH-32B18	1000	145	140	1800	5030	195	310	451	410	200	490	40	65	230	180	310	~415	8	16	25	20	25
LH-32B20	1000	145	140	2000	5430	195	310	451	410	200	490	40	65	230	180	310	~415	8	16	25	20	25
LH-32B22	1000	145	140	2200	5830	195	310	451	410	200	490	40	65	230	180	310	~415	8	16	25	20	25
LH-40B13	1100	160	155	1300	4210	235	320	480	450	225	525	35	65	260	200	330	~445	8	10	20	20	30
LH-40B16	1100	160	155	1600	4810	235	320	480	450	225	525	35	65	260	200	330	~445	8	10	20	20	30
LH-40B18	1100	160	155	1800	5210	235	320	520	479	225	559	35	65	260	200	330	~445	10	16	25	20	30
LH-40B20	1100	160	155	2000	5610	235	320	520	479	225	559	35	65	260	200	330	~445	10	16	25	20	30
LH-40B22	1100	160	155	2200	6010	235	320	520	479	225	559	35	65	260	200	330	~445	10	16	25	20	30
LH-50B13	1505	170	165	1300	4715	285	475	600	559	300	639	37	77	306	226	380	~491	10	16	25	20	40
LH-50B16	1505	170	165	1600	5315	285	475	600	559	300	639	37	77	306	226	380	~491	10	16	25	20	40
LH-50B18	1505	170	165	1800	5715	285	475	680	639	300	719	37	77	306	226	380	~491	12	16	25	20	40
LH-50B20	1505	170	165	2000	6115	285	475	680	639	300	719	37	77	306	226	380	~491	12	16	25	20	40
LH-50B22	1505	170	165	2200	6515	285	475	680	639	300	719	37	77	306	226	380	~491	12	16	25	20	40
LH-50B25	1505	170	165	2500	7115	285	475	684	639	300	719	37	77	306	226	380	~491	12	20	25	20	40
LH-63B22	1700	200	195	2200	6850	355	475	786	750	315	840	50	90	380	300	556	~565	16	16	20	20	40
LH-63B25	1700	200	195	2500	7450	355	475	786	750	315	840	50	90	380	300	556	~565	16	16	20	20	40
LH-63B28	1700	200	195	2800	8050	355	475	791	750	315	845	50	90	380	300	556	~565	16	16	25	20	40
LH-63B32	1700	200	195	3200	8850	355	475	795	750	315	845	50	90	380	300	556	~565	16	20	25	20	40
LH-71B20	1900	200	195	2000	6730	395	520	955	900	450	1010	50	95	490	400	670	~670	25	25	30	20	45
LH-71B25	1900	200	195	2500	7730	395	520	955	900	450	1010	50	95	490	400	670	~670	25	25	30	20	45
LH-71B28	1900	200	195	2800	8330	395	520	955	900	450	1010	50	95	490	400	670	~670	25	25	30	20	45
LH-71B32	1900	200	195	3200	9130	395	520	955	900	450	1010	50	95	490	400	670	~670	25	25	30	20	45
LH-71B36	1900	200	195	3600	9930	395	520	1065	1000	450	1115	50	95	490	400	670	~670	25	30	35	20	45
LH-71B40	1900	200	195	4000	10730	395	520	1065	1000	450	1115	50	95	490	400	670	~670	25	30	35	20	45
LH-80B20	2070	200	195	2000	4920	440	565	1045	990	460	1100	50	95	490	400	670	~670	25	25	30	20	45
LH-80B25	2070	200	195	2500	5920	440	565	1045	990	460	1100	50	95	490	400	670	~670	25	25	30	20	45
LH-80B28	2070	200	195	2800	6520	440	565	1045	990	460	1100	50	95	490	400	670	~670	25	25	30	20	45
LH-80B32	2070	200	195	3200	7320	440	565	1045	990	460	1100	50	95	490	400	670	~670	25	25	30	20	45
LH-80B36	2070	200	195	3600	8120	440	565	1115	1050	460	1165	50	95	490	400	670	~670	25	30	35	20	45
LH-80B40	2070	200	195	4000	8920	440	565	1185	1120	460	1235	50	95	490	400	670	~670	25	30	35	20	45

Table 40. Weights of 4-wheel end carriages. The weights are given for end carriages running on the same rail.

LH-end carriage	Wheels+Steel structure [kg]			Steel structure [kg]	Wheels [kg]			Joint beam [kg/m]
	-1	-2	-3		-1	-2	-3	
LH-25B13	998	970	-	570	428	400	-	140
LH-25B16	1060	1032	-	632	428	400	-	140
LH-25B18	1278	1250	-	850	428	400	-	140
LH-25B20	1322	1294	-	894	428	400	-	140
LH-25B22	1370	1342	-	942	428	400	-	140
LH-32B13	1366	1306	-	706	660	600	-	145
LH-32B16	1432	1372	-	772	660	600	-	145
LH-32B18	1626	1566	-	966	660	600	-	145
LH-32B20	1686	1626	-	1026	660	600	-	145
LH-32B22	1752	1692	-	1092	660	600	-	145
LH-40B13	1912	1816	1938	896	1016	920	1042	155
LH-40B16	1988	1892	2014	972	1016	920	1042	155
LH-40B18	2248	2152	2274	1232	1016	920	1042	155
LH-40B20	2320	2224	2346	1304	1016	920	1042	155
LH-40B22	2390	2294	2416	1374	1016	920	1042	155
LH-50B13	3315	3082	-	1510	1805	1572	-	160
LH-50B16	3437	3204	-	1632	1805	1572	-	160
LH-50B18	3847	3614	-	2042	1805	1572	-	160
LH-50B20	3945	3712	-	2140	1805	1572	-	160
LH-50B22	4043	3810	-	2238	1805	1572	-	160
LH-50B25	4247	4014	-	2442	1805	1572	-	160
LH-63B22	6409	6084	5624	3060	3349	3024	2564	205
LH-63B25	6607	6282	5822	3258	3349	3024	2564	205
LH-63B28	6937	6612	6152	3588	3349	3024	2564	205
LH-63B32	7293	6968	6508	3944	3349	3024	2564	205
LH-71B20	8927	8470	-	4834	4093	3636	-	237
LH-71B25	9541	9084	-	5448	4093	3636	-	237
LH-71B28	9905	9448	-	5812	4093	3636	-	237
LH-71B32	10393	9936	-	6300	4093	3636	-	237
LH-71B36	11903	11446	-	7810	4093	3636	-	237
LH-71B40	12345	11888	-	8252	4093	3636	-	237
LH-80B20	10341	9750	-	5282	5059	4468	-	248
LH-80B25	10989	10398	-	5930	5059	4468	-	248
LH-80B28	11379	10788	-	6320	5059	4468	-	248
LH-80B32	11897	11306	-	6838	5059	4468	-	248
LH-80B36	13123	12532	-	8064	5059	4468	-	248
LH-80B40	14129	13538	-	9070	5059	4468	-	248

6 WHEEL LOADS (FEM LOADING CASES I, II, III AND FATIGUE)

Table 41 Values of amplifying coefficient γ_c.

Appliance group	A1	A2	A3	A4	A5	A6	A7	A8
γ_c	1.00	1.02	1.05	1.08	1.11	1.14	1.17	1.2

6.1 LH-25

Figure 9. Wheel loads of LH-25 in cases I, II and III. P_{CASE} I, II, III = $\psi \times \gamma_c \times P_{stat\_max}$. Wheel load with dynamic factor (ψ) 1.15 and amplifying coefficient (γ_c) by appliance group (A3…A8).

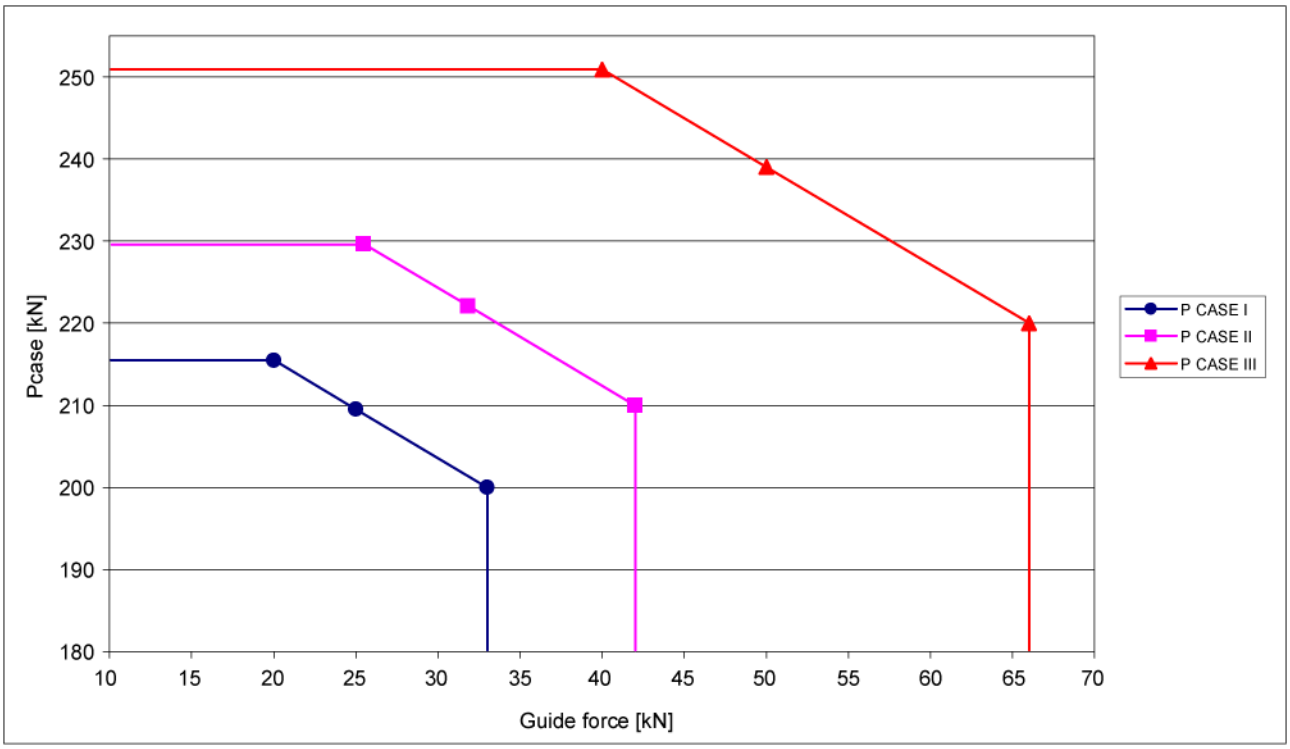

Figure 10. Maximum dynamic wheel loads of LH-25 in fatigue case.

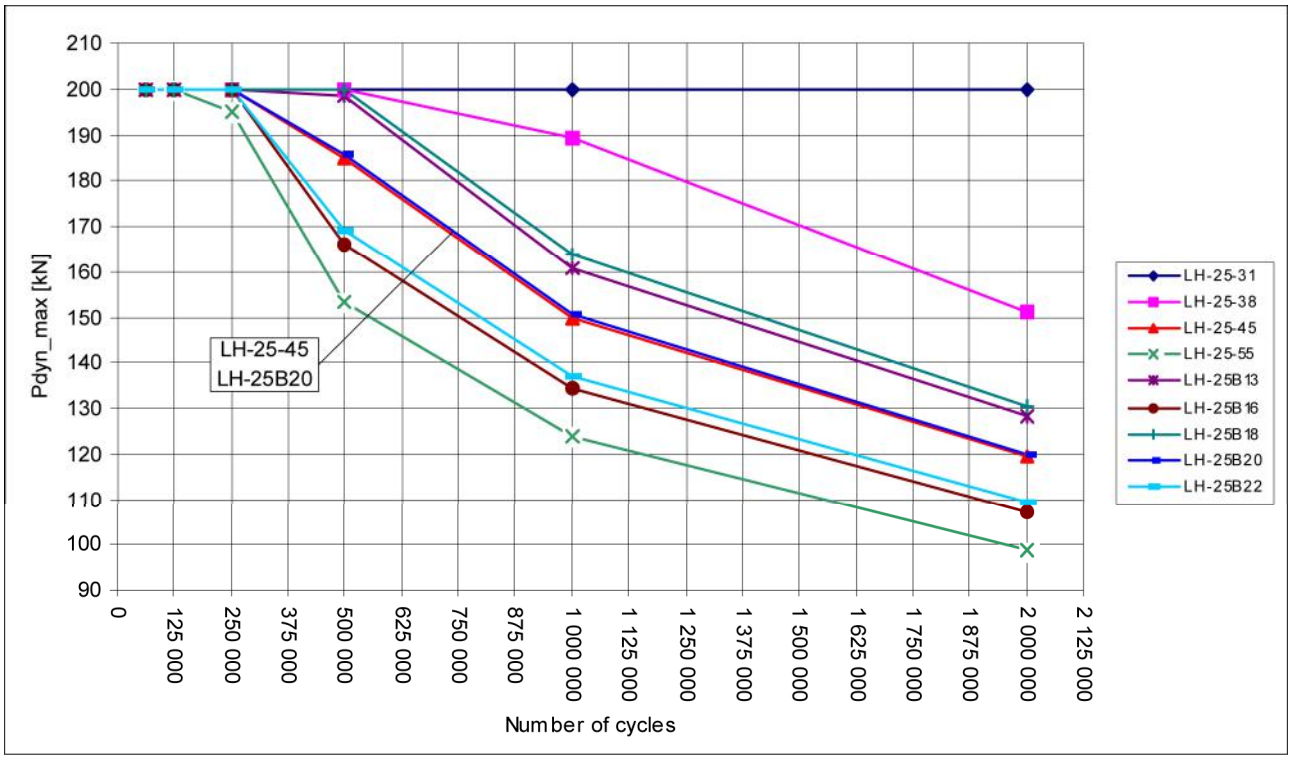

6.2 LH-32

Figure 11. Wheel loads of LH-32 in cases I, II and III. P_{CASE} I, II, III = $\psi \times \gamma_c \times P_{stat\_max}$. Wheel load with dynamic factor (ψ) 1.15 and amplifying coefficient (γ_c) by appliance group (A3…A8).

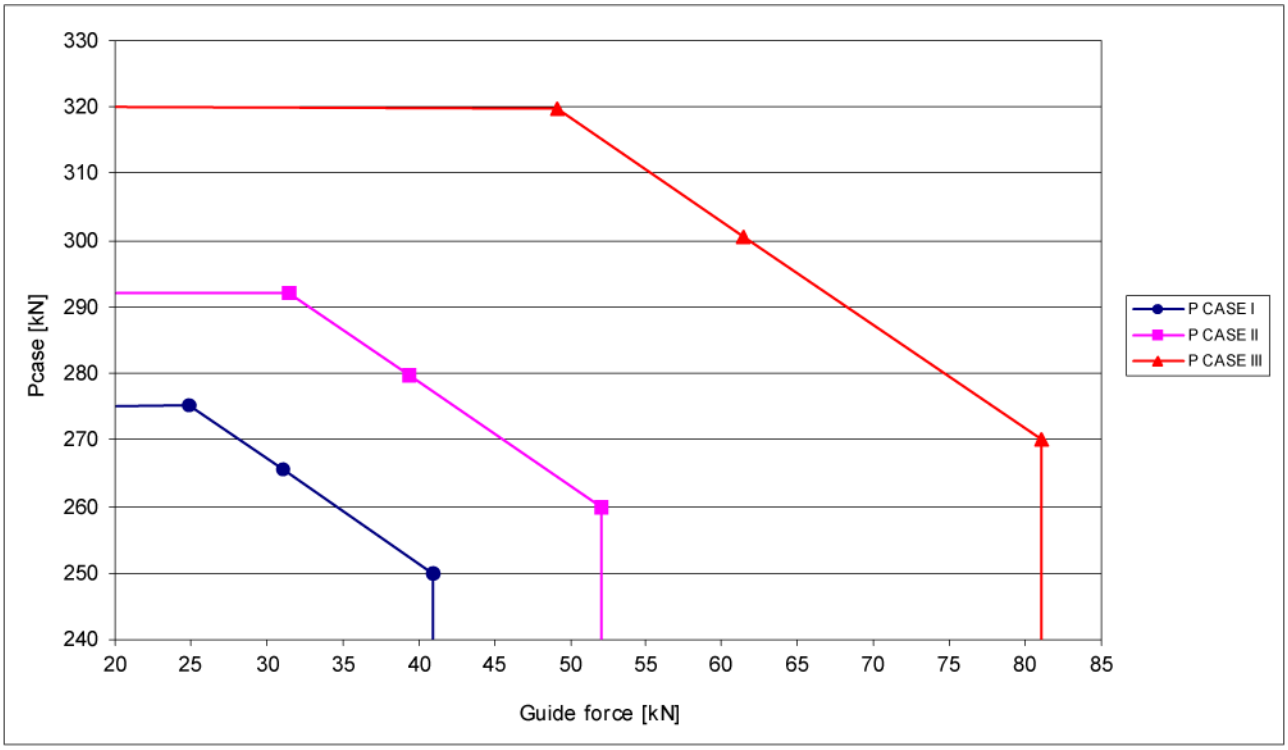

Figure 12. Maximum dynamic wheel loads of LH-32 in fatigue case.

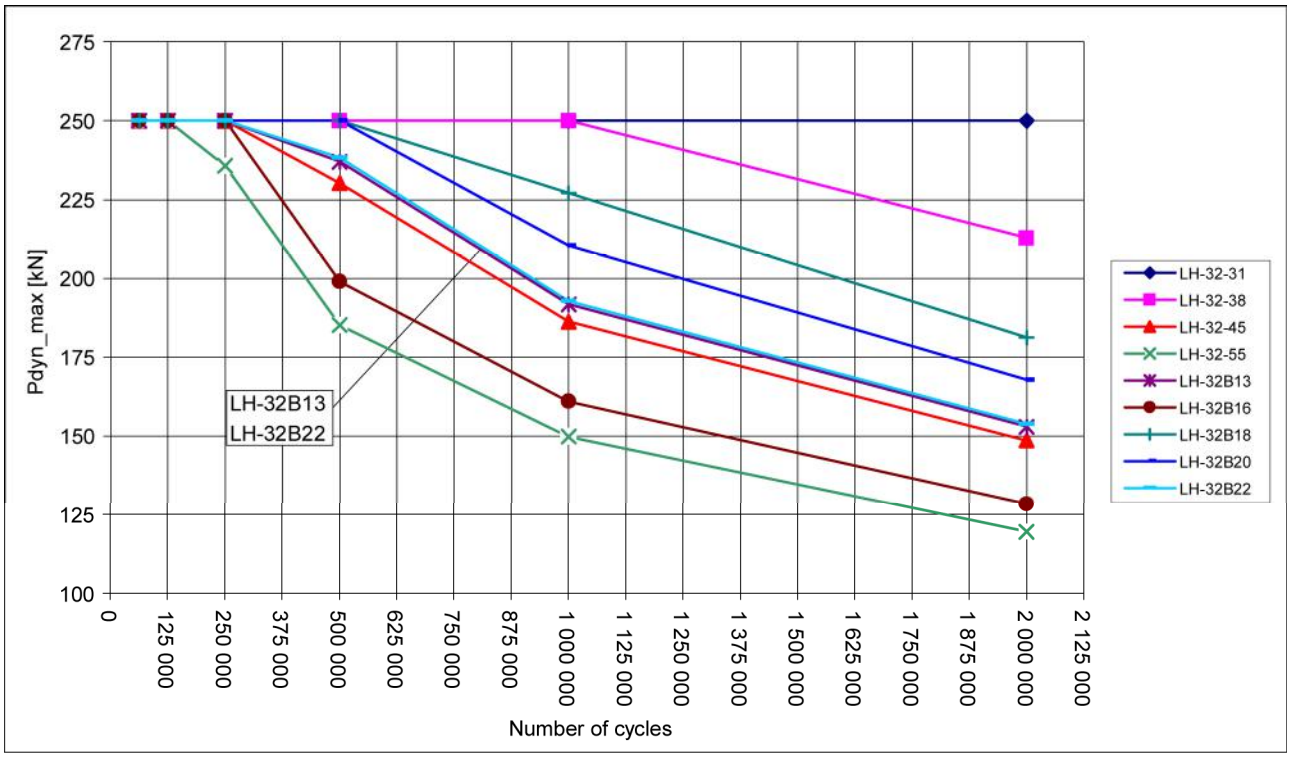

6.3 LH-40

Figure 13. Wheel loads of LH-40 in cases I, II and III. P_{CASE} I, II, III = $\psi \times \gamma_c \times P_{stat\_max}$. Wheel load with dynamic factor (ψ) 1.15 and amplifying coefficient (γ_c) by appliance group (A3…A8).

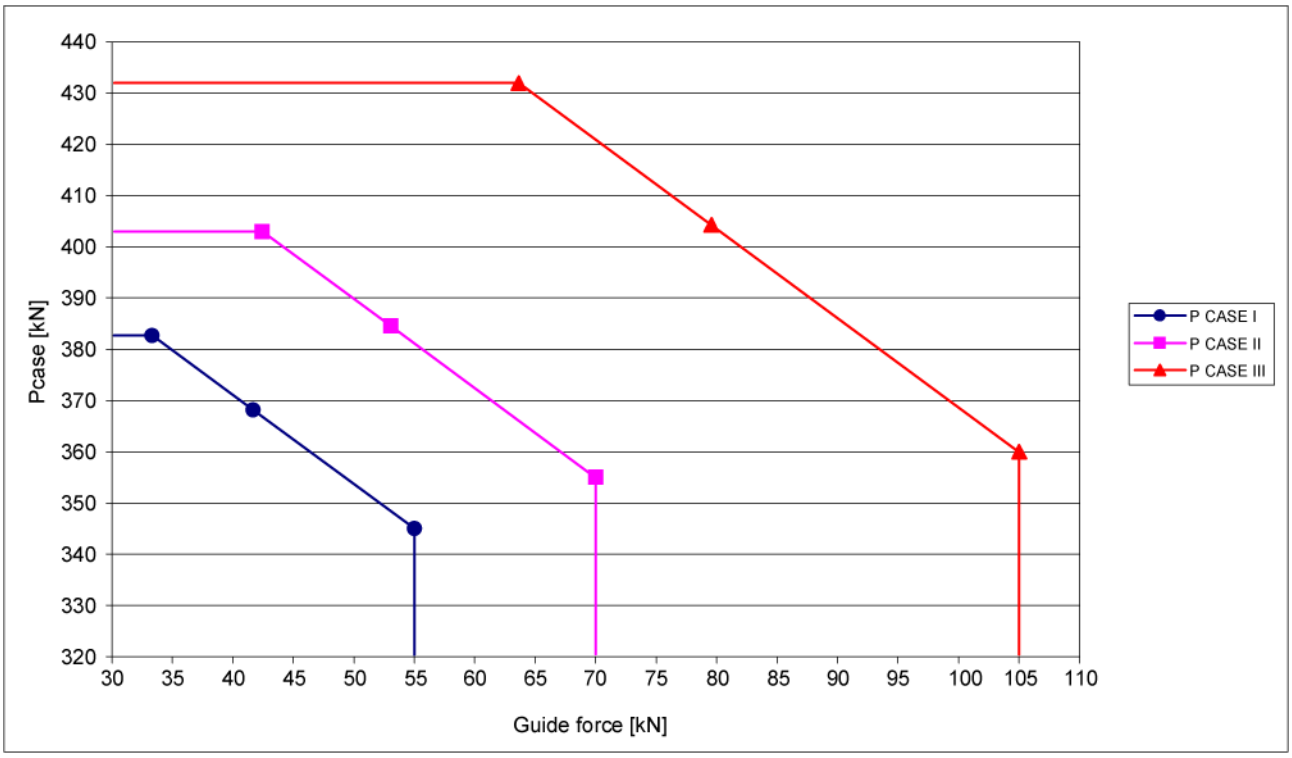

Figure 14. Maximum dynamic wheel loads of LH-40 in fatigue case.

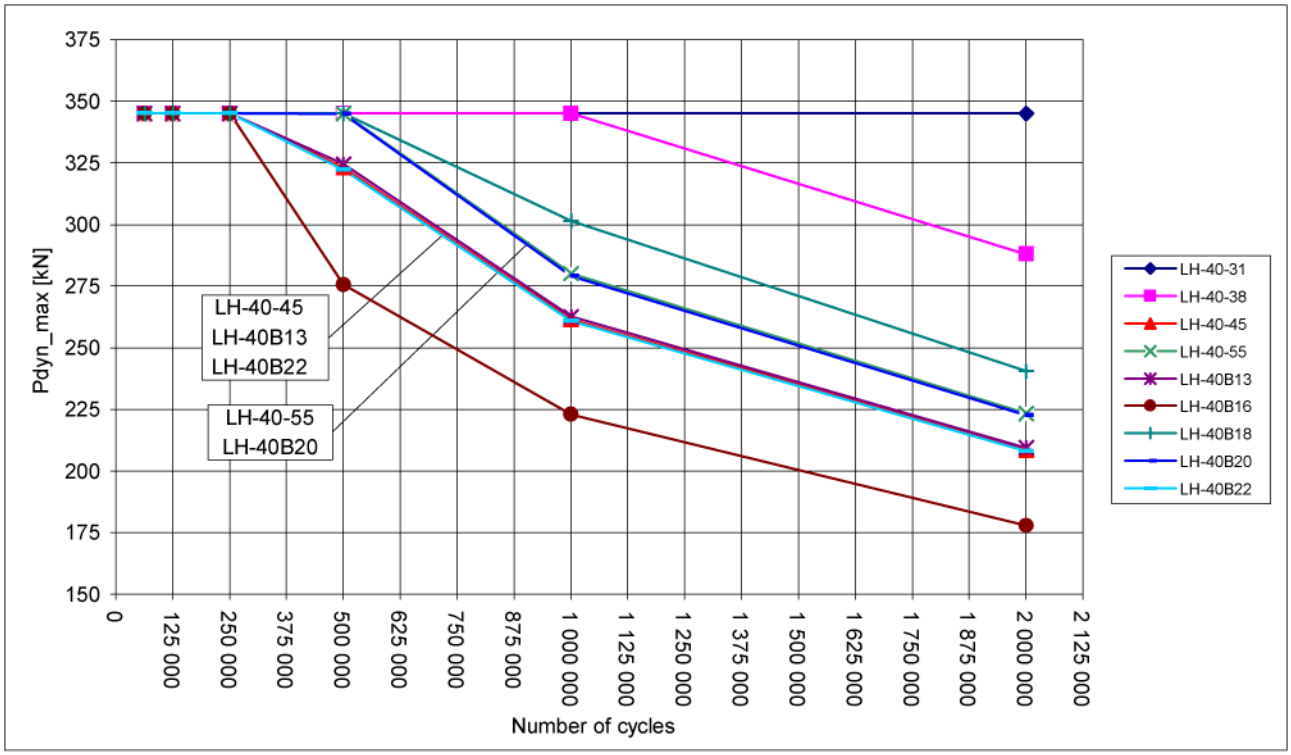

6.4 LH-50

Figure 15. Wheel loads of LH-50 in cases I, II and III. P_{CASE} I, II, III = $\psi \times \gamma_c \times P_{stat\_max}$. Wheel load with dynamic factor (ψ) 1.15 and amplifying coefficient (γ_c) by appliance group (A3…A8).

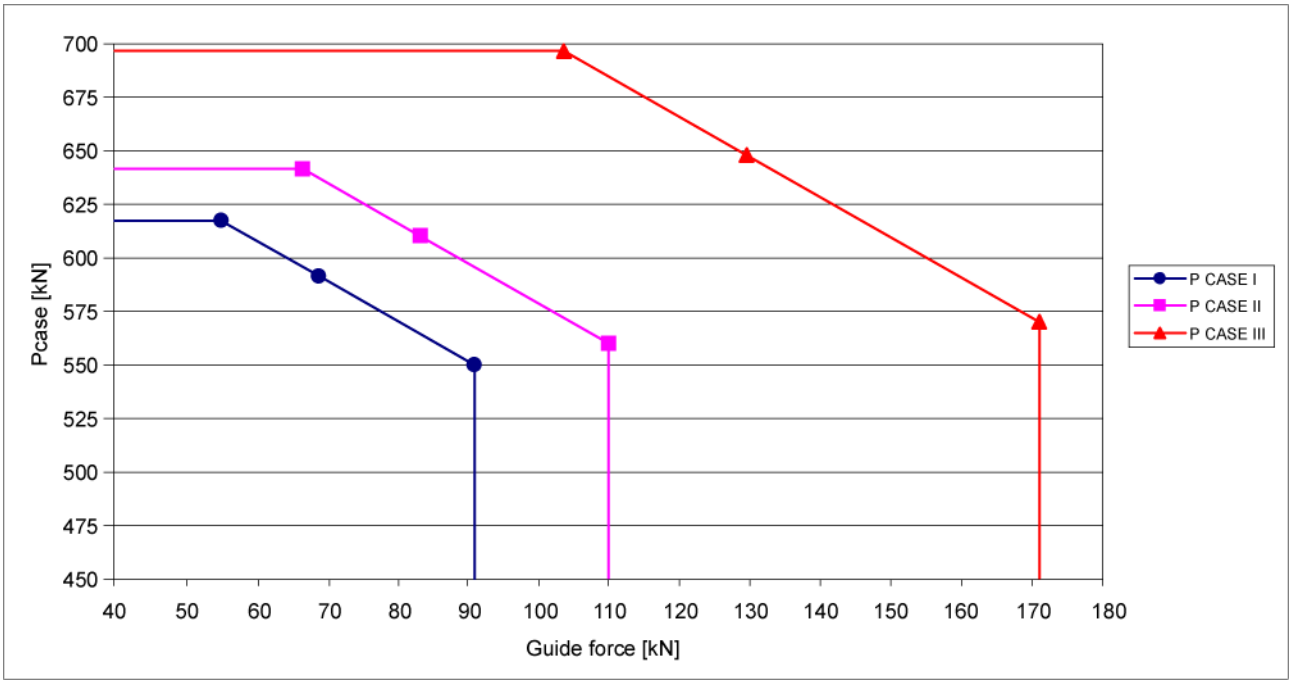

Figure 16. Maximum dynamic wheel loads of LH-50 in fatigue case.

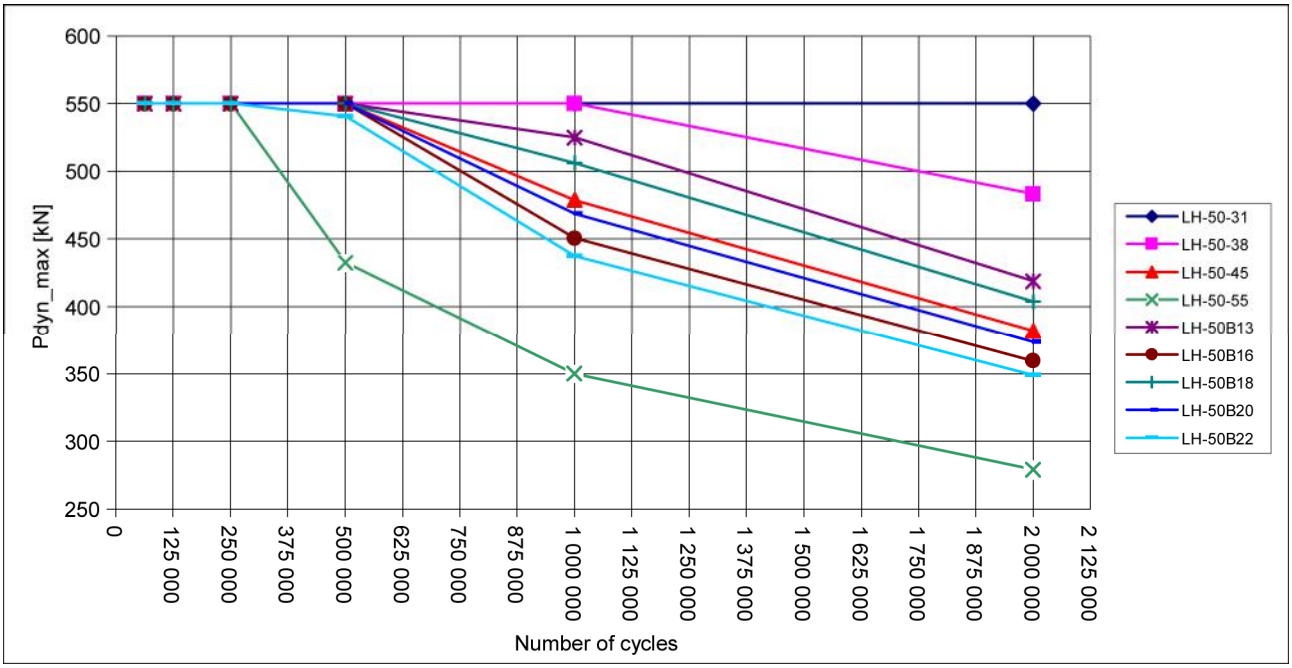

6.5 LH-63

Figure 17. Wheel loads of LH-63 in cases I, II and III. P_{CASE} I, II, III = $\psi \times \gamma_c \times P_{stat\_max}$. Wheel load with dynamic factor (ψ) 1.15 and amplifying coefficient (γ_c) by appliance group (A3…A8).

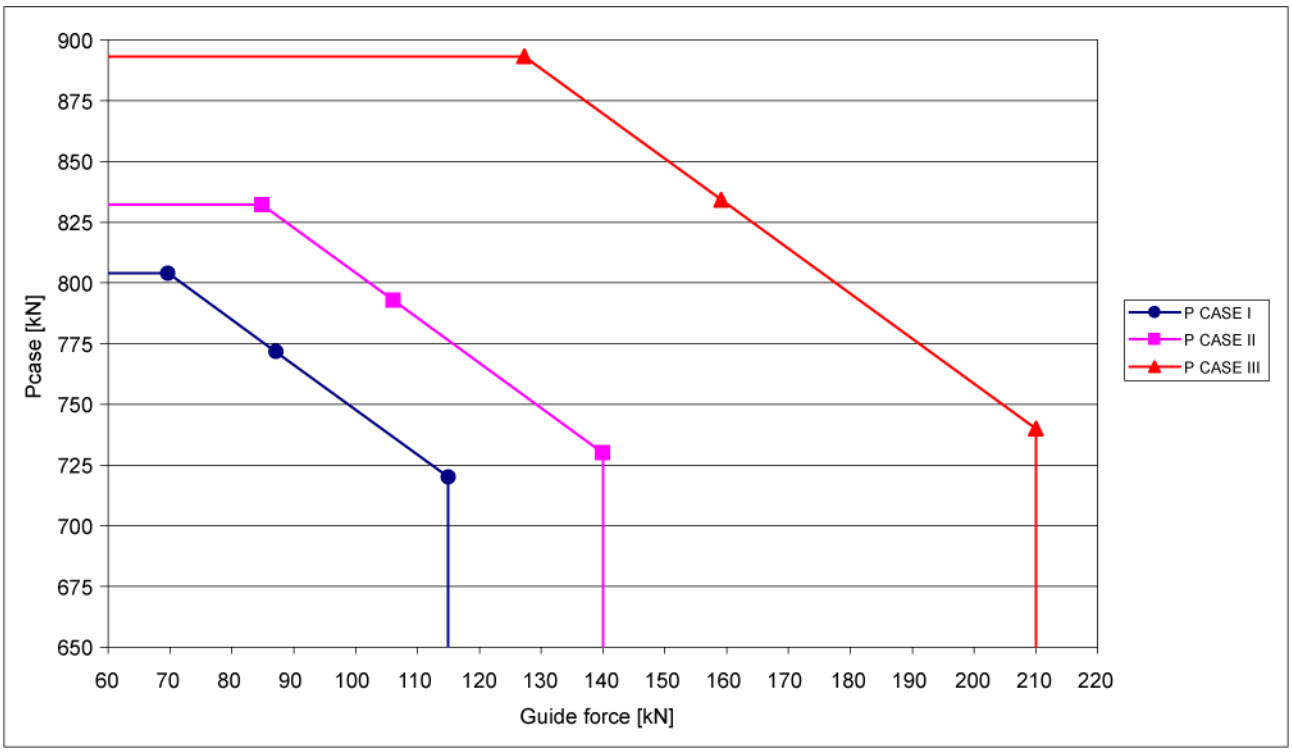

Figure 18. Maximum dynamic wheel loads of LH-63 in fatigue case.

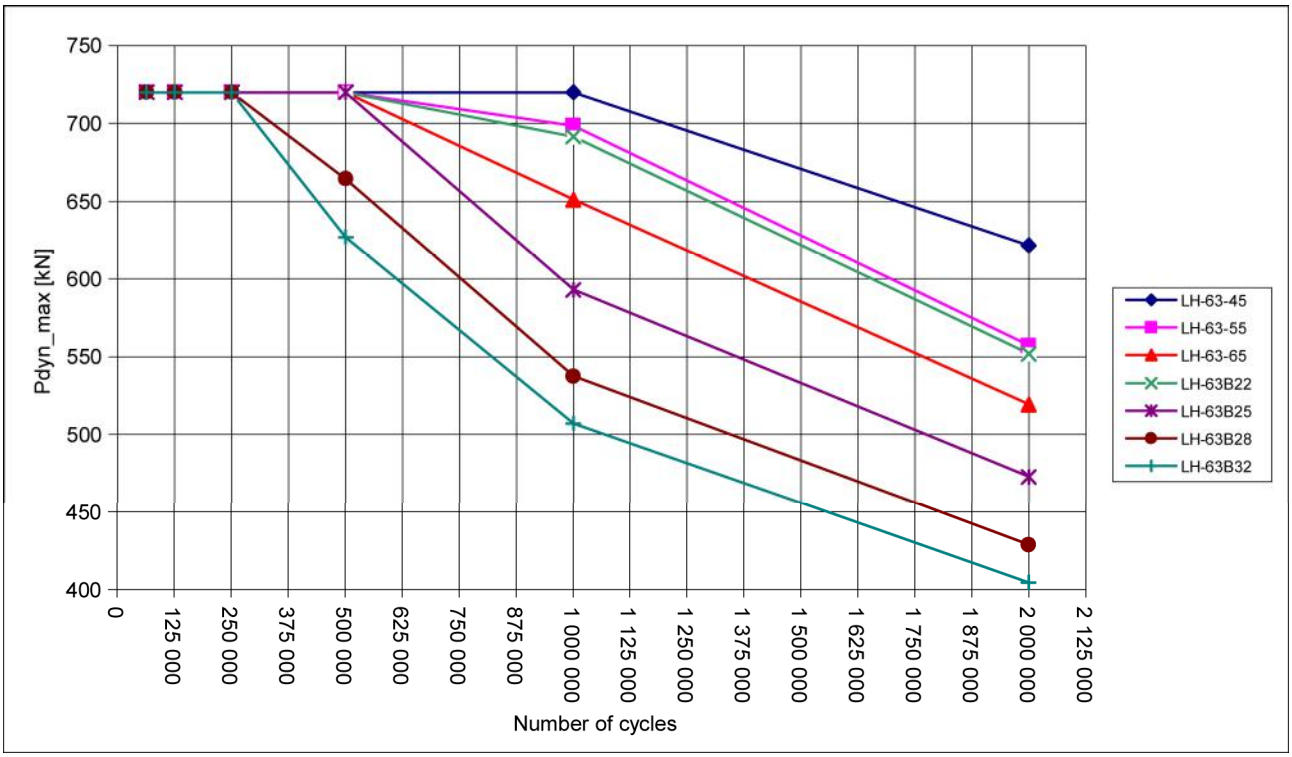

6.6 LH-71

Figure 19. Wheel loads of LH-71 in cases I, II and III. P_{CASE} I, II, III = $\psi \times \gamma_c \times P_{stat\_max}$. Wheel load with dynamic factor (ψ) 1.15 and amplifying coefficient (γ_c) by appliance group (A3…A8).

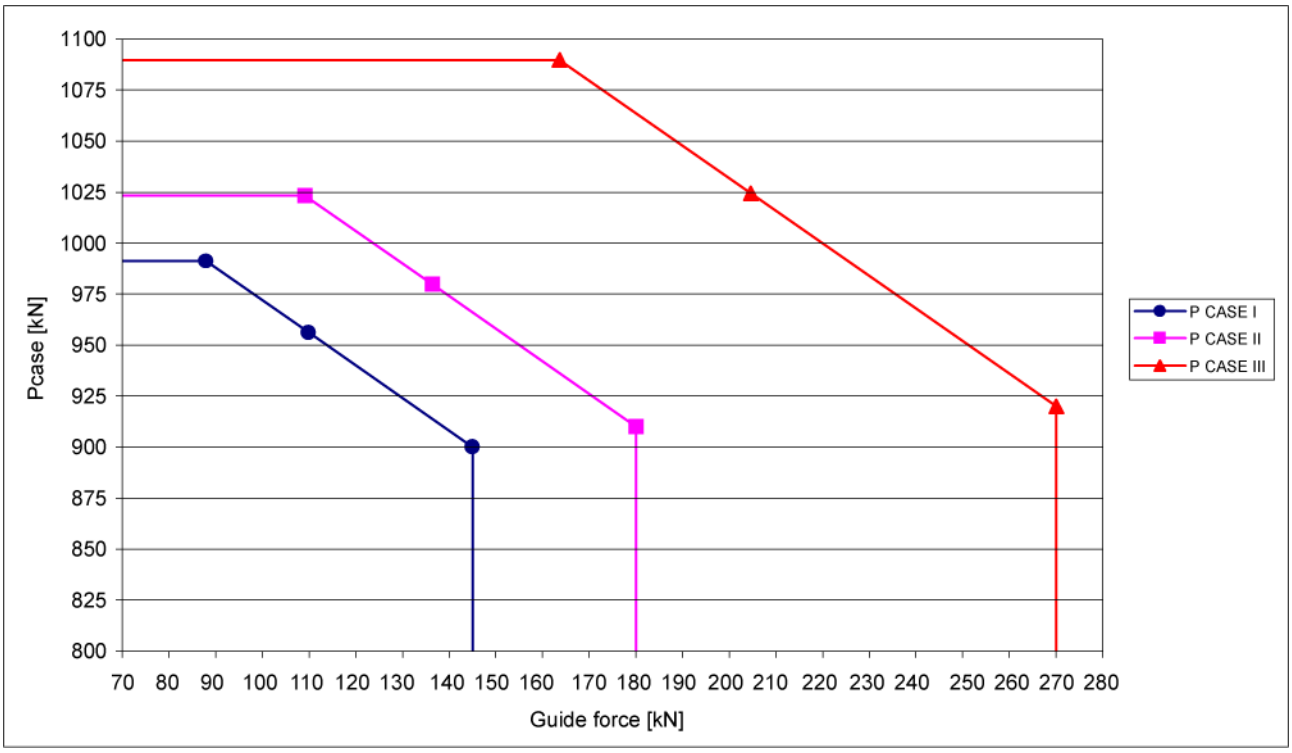

Figure 20. Maximum dynamic wheel loads of LH-71 in fatigue case.

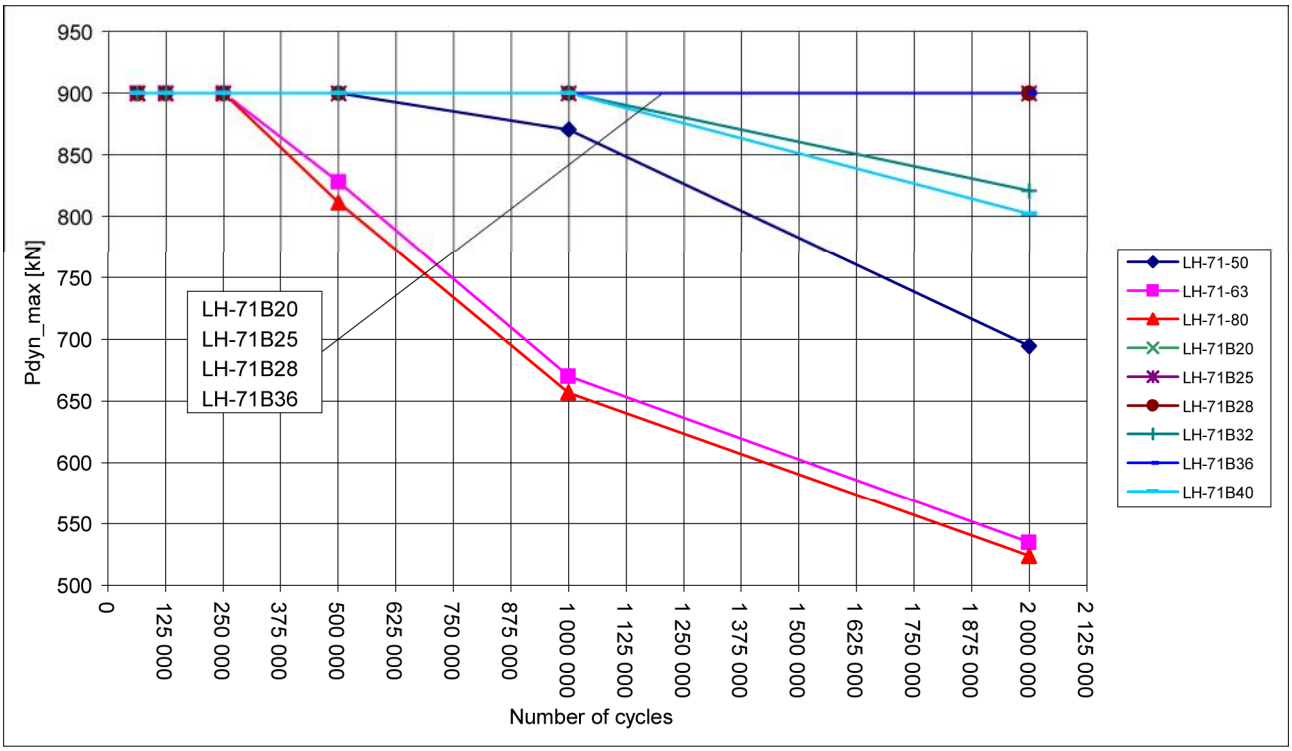

6.7 LH-80

Figure 21. Wheel loads of LH-80 in cases I, II and III. P_{CASE} I, II, III = $\psi \times \gamma_c \times P_{stat\_max}$. Wheel load with dynamic factor (ψ) 1.15 and amplifying coefficient (γ_c) by appliance group (A3…A8).

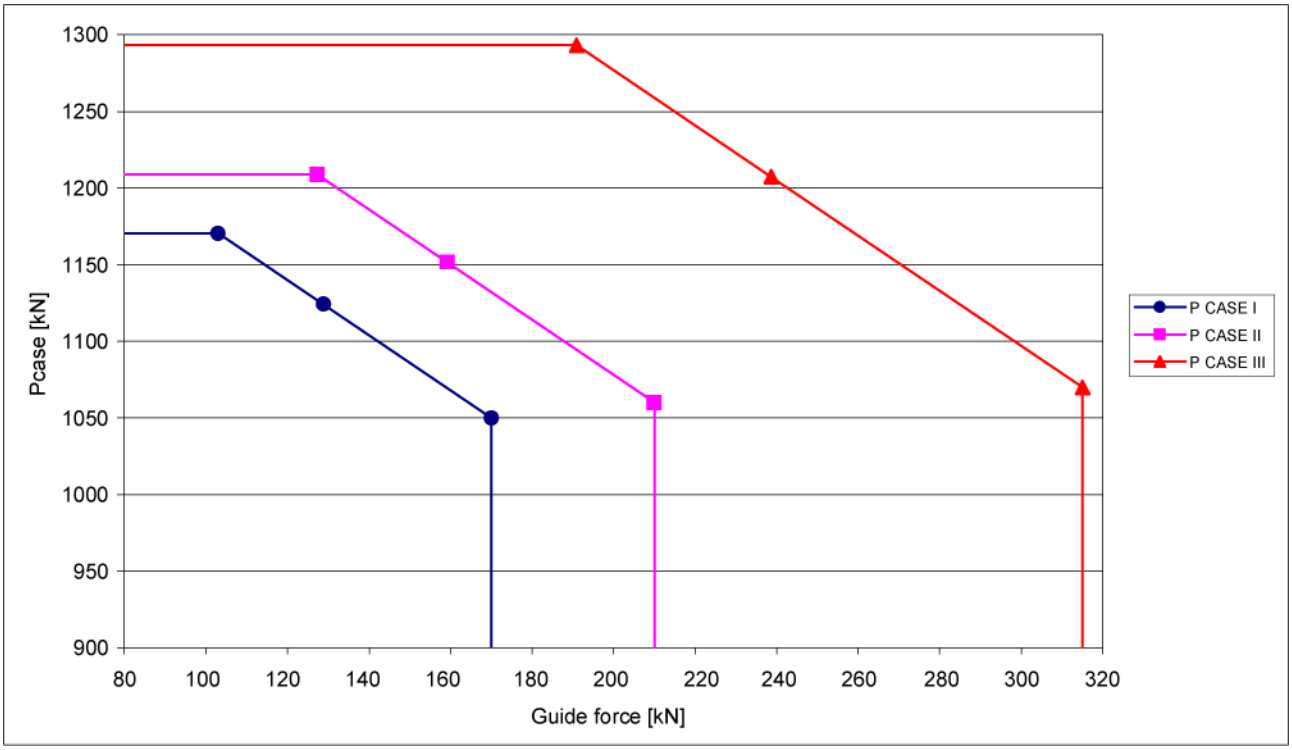

Figure 22. Maximum dynamic wheel loads of LH-80 in fatigue case.

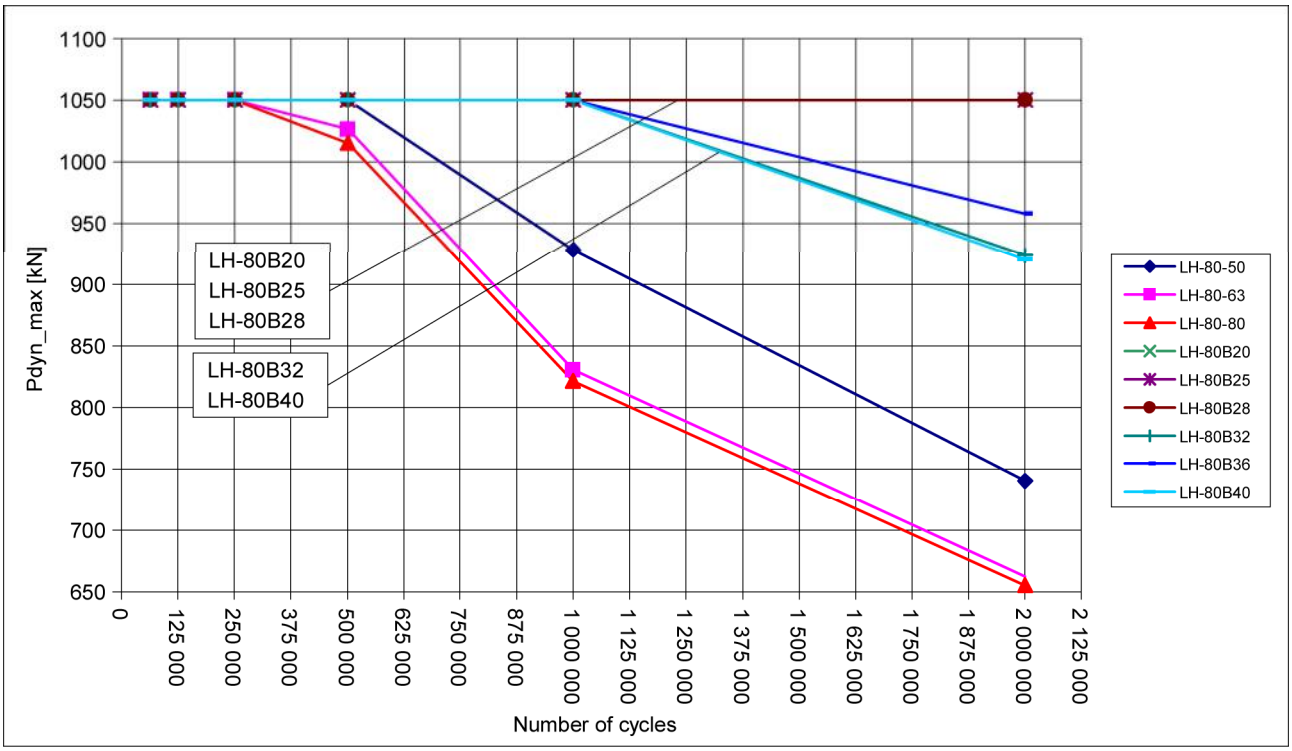

INFORMATIVE ANNEX A

Example on how to use the diagrams

- Calculate the maximum static wheel load P_{stat_max}.
  - Example: P_{stat_max} = 450 kN.
- Calculate $P_{CASE\ I}$, $P_{CASE\ II}$ and $P_{CASE\ III}$ according to FEM standard.
  - Example: $P_{CASE\ I}$ = 574 kN (see figure 23).
- Pre-select the LH- end carriage according to table 2. Select the LH- end carriage with vertical wheel load closest to the $P_{CASE\ I}$ calculated in step 2.
  - Example: LH-50 has the closest value (550 kN) to 574 kN, so LH-50 is pre-selected.
- The maximum allowed guide force can be seen in the wheel load diagram of the pre-selected end carriage.
  - Example: Maximum allowed guide force is about 75 kN (see figure 23).

Figure 23. Wheel loads of LH-50 in cases I, II and III. P_{CASE} I, II, III = $\psi \times \gamma_c \times P_{stat\_max}$. Wheel load with dynamic factor (ψ) 1.15 and amplifying coefficient (γ_c) by appliance group (A3…A8).

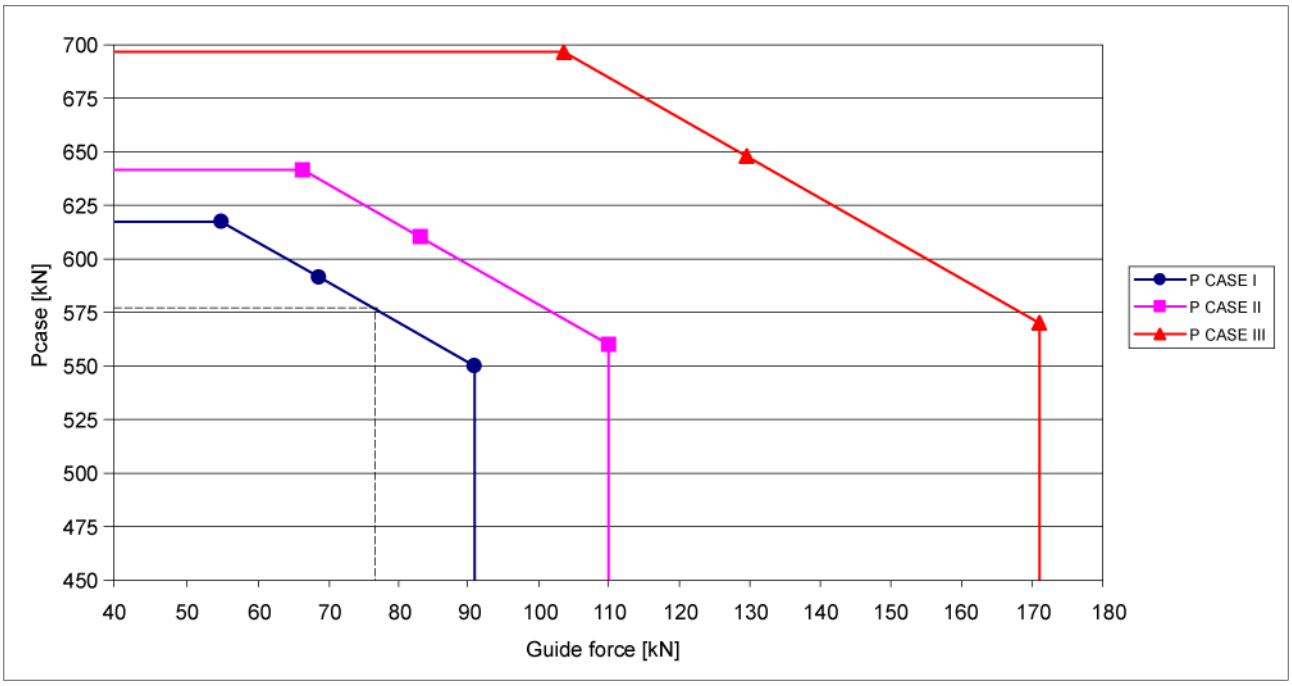

- The maximum allowed guide force of the pre-selected LH- end carriage shall be sufficient for the case.
  - Example: Maximum allowed guide force of LH-50 is enough for the case.
- Calculate the maximum dynamic wheel load P_{dyn_max} according to FEM standard and compare the value to the maximum dynamic wheel load of the selected LH- end carriage.
  - Example: P_{dyn_max} = 517.5 kN and the number of cycles in component group E6 is 500 000, so according to figure 24 all the LH-50 end carriages except LH-50-55 are possible for the case.

Figure 24. Maximum dynamic wheel loads of LH-50 in fatigue case.

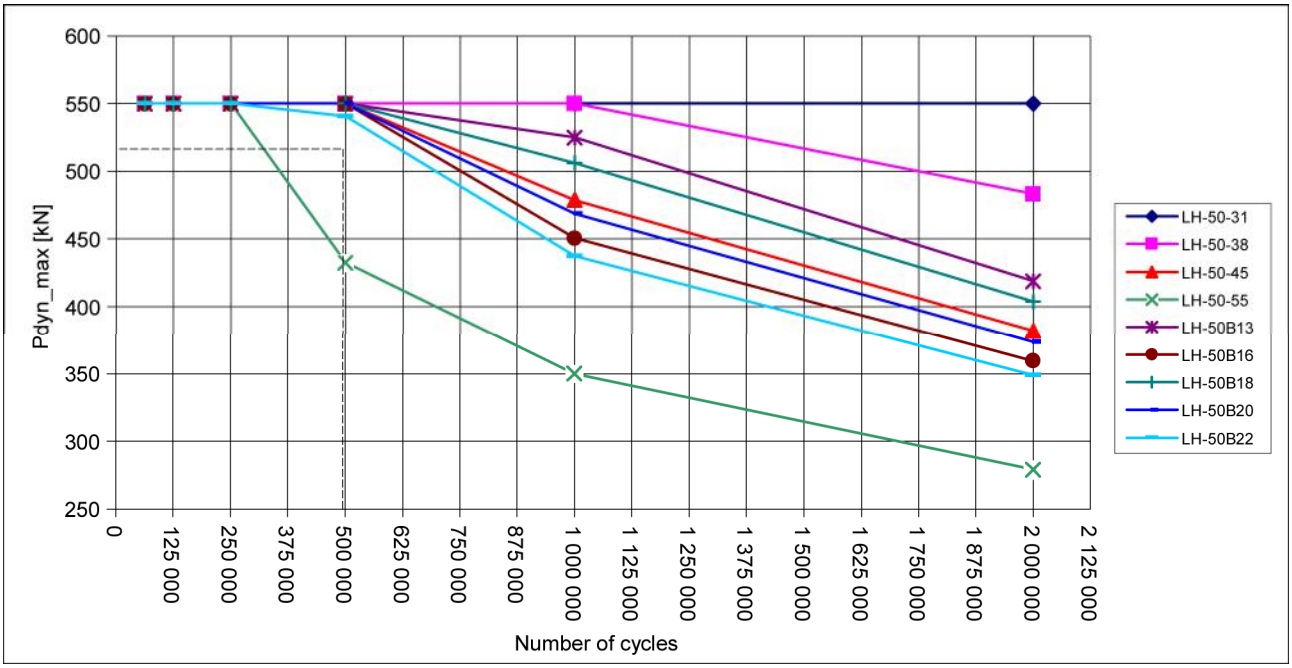

- Check the rail wheel bearings and the surface pressure of rail wheels according to FEM standard (see COM 09-01).
- If the pre-selected LH- end carriage passes all these checks, the LH- end carriage can be selected.